

Vento Ergo A85-3 L035 S Pro V.3

Heat recovery single-room units

- Air flow in heat recovery mode: 43
- Heat exchanger material: Ceramic
- Enthalpy heat exchanger
- Control: Remote Control
- Casing material: Plastic
- Cable with mains plug
- Humidity sensor
- Temperature sensor
- Shutters

	Unit of measurement	Vento Ergo A85-3 L035 S Pro V.3		
Phases	-	1		
Minimum supply voltage	V	100		
Maximum supply voltage	V	240		
Power supply frequency	Hz	50/60		
Maximum airflow	m³/h	36	59	85
Air flow in heat recovery mode	m³/h	18	30	43
Heat recovery efficiency, max	%	85		
Heat exchanger material	-	Ceramic		
Transported air temperature (max)	°C	40		
Transported air temperature (min)	°C	-20		
Ingress protection rating	-	IP24		

Dimensions

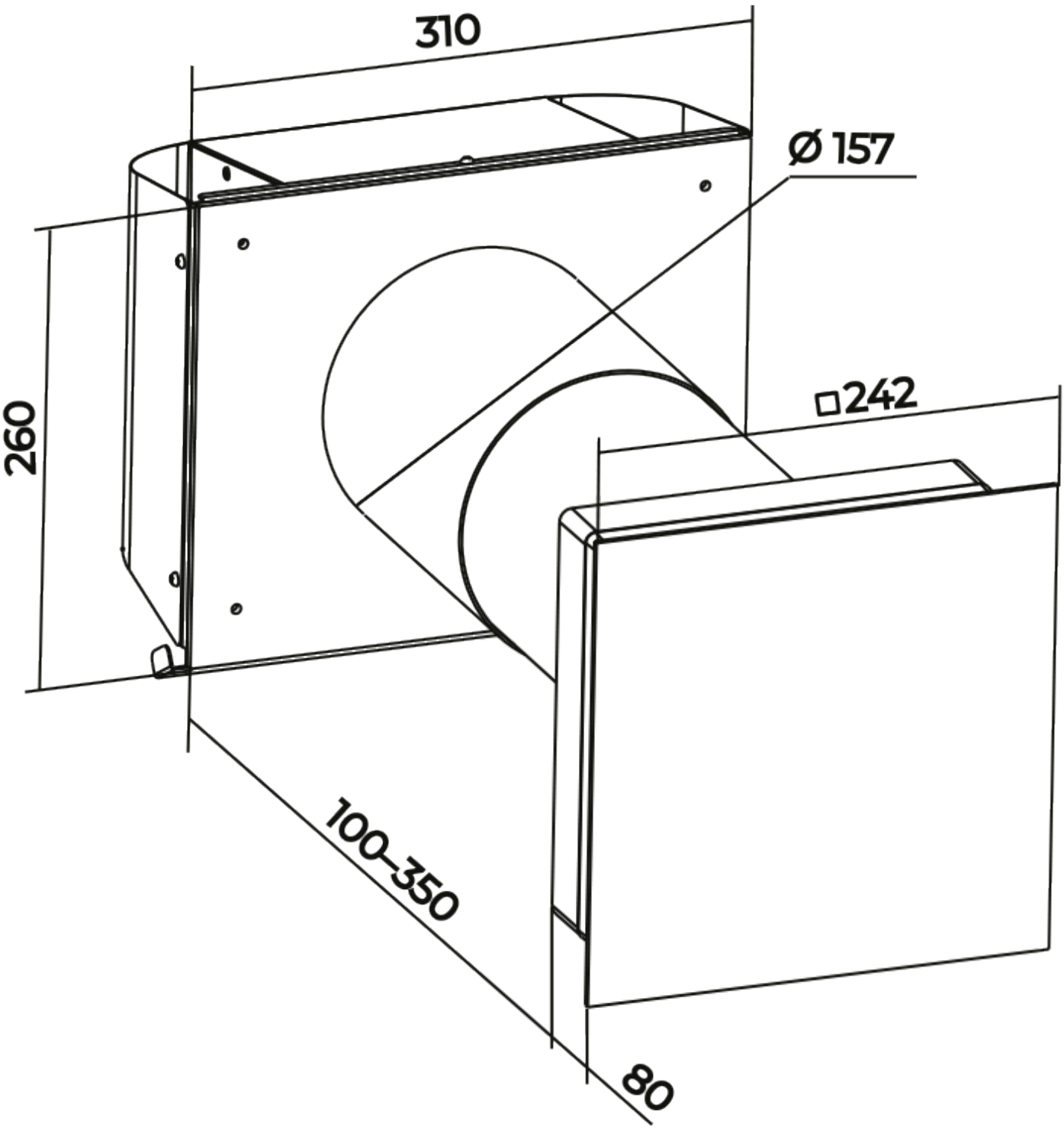

Accessories

Other accessories

Name	Photo	Description

FP Vento Ergo A50 G3		G3 filters (2 pcs.)
FPC 150x50 G4		Filter
Completion Kit Vento Ergo A50(85)-1 Pro V.3		Includes: Ceramic regenerator ∅ 150 mm, Vento Ergo A50-1 ventilation unit, G3 filters, Mounting plate, Remote control
FP Vento Ergo A50 F7		F7 panel filter
FB Vento Ergo		Remote control

Plastic

Name	Photo	Description
KIT BlauPlast 204x60-1		Kit for angular mounting (for walls with standard thickness)

Accessories for ventilation systems

Name	Photo	Description
Pre-installation Kit Vento Ergo A50 S10 Pro		Pre-installation kit for mounting into a wall with standard thickness. Includes: round telescopic air duct with the diameter of 150 mm and adjustable length from 240 to 460 mm; AH-10 white 160 outer ventilation hood; plastic foam plug; plastic foam wedges.