

# Reneo SE 380-E L S21 CF

Heat and energy recovery air handling units

- Power of electrical preheater: 1050
- Heat exchanger type: Counter flow
- Heat exchanger material: Enthalpy
- Sound-insulated casing
- Enthalpy heat exchanger
- Bypass: Auto
- Reheater: Optional
- Preheater: Built-in
- BMS protocol: ModBus
- Control: Smartphone
- Casing material: EPP
- Humidity sensor: Optional
- CO2 sensor: Optional
- PM2.5 sensor: Optional

| | Unit of measurement | Reneo SE 380-E L S21 CF |
|---|---|---|
| Phases | - | 1 |
| Maximum supply voltage | V | 230 |
| Minimum supply voltage | V | 230 |
| Power supply frequency | Hz | 50/60 |
| Power of electrical preheater | W | 1050 |
| Maximum airflow | m³/h | 390 |
| Heat recovery efficiency, max | % | 83 |
| Heat exchanger type | - | Counter flow |
| Heat exchanger material | - | Enthalpy |
| Weight | kg | 26 |
| Transported air temperature (max) | °C | 40 |
| Transported air temperature (min) | °C | -25 |
| Ambient air temperature max | °C | 40 |
| Ambient air temperature min | °C | 1 |
| Ingress protection rating | - | IP22 |
| Ambient air humidity max | % | 60 |
| Ingress protection rating of the drive | - | IP44 |

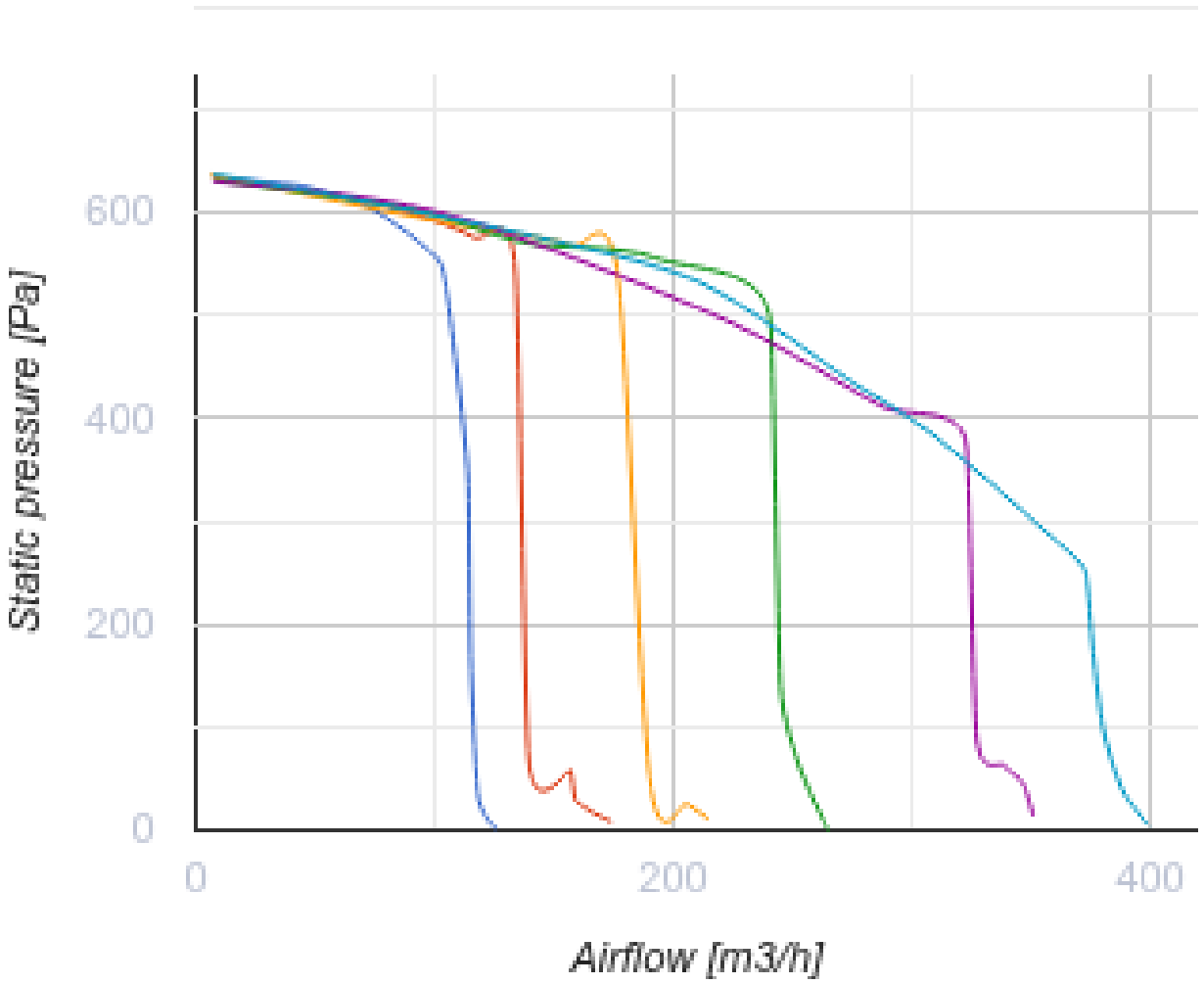
Static pressure [Pa]
600
400
200
0
0
200
400
Airflow [m3/h]

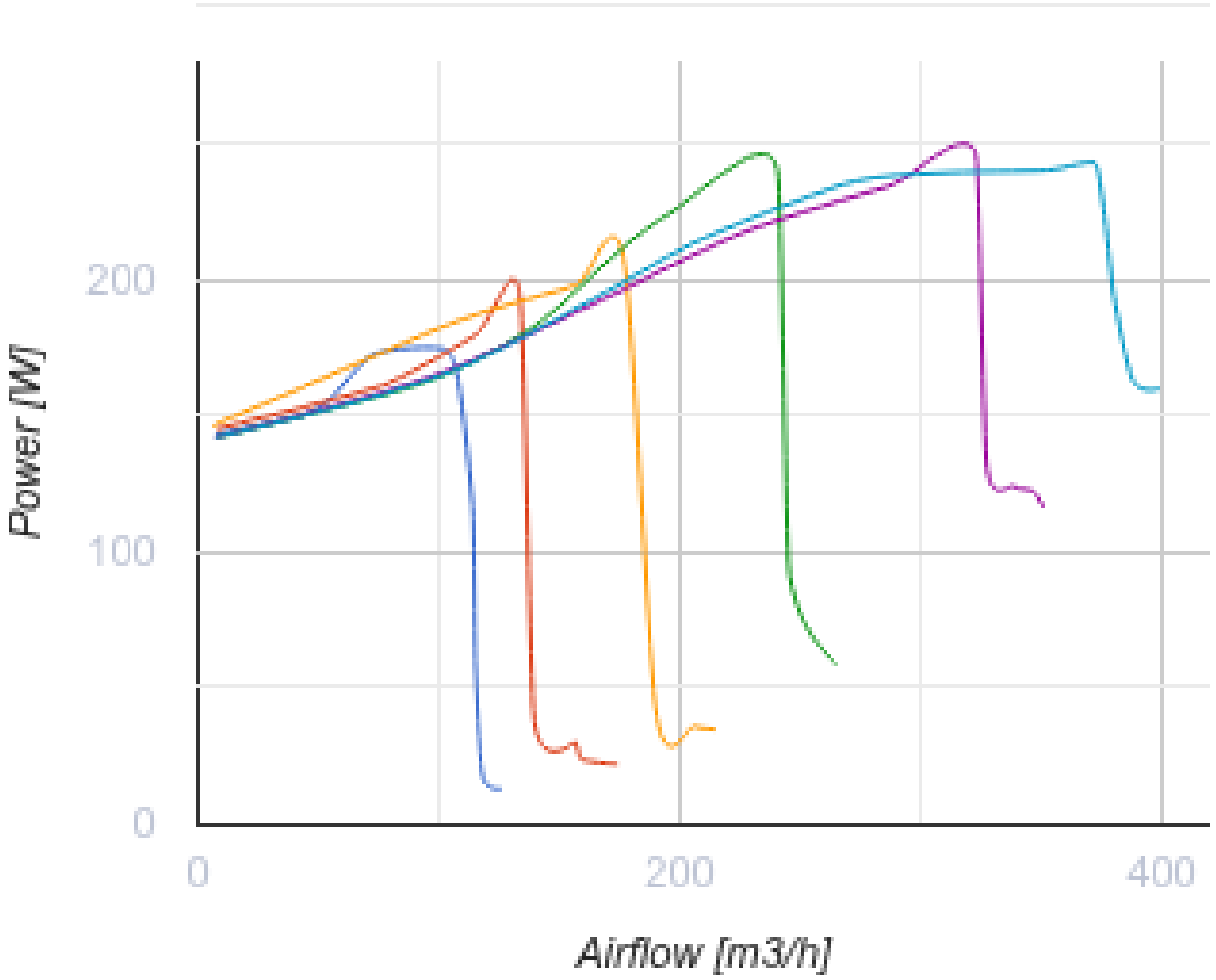


## Dimensions

| Ø D | H | H1 | L | L1 | W | W1 |
|---|---|---|---|---|---|---|
| 160 | 880 | 939 | 616 | 230 | 770 | 355 |

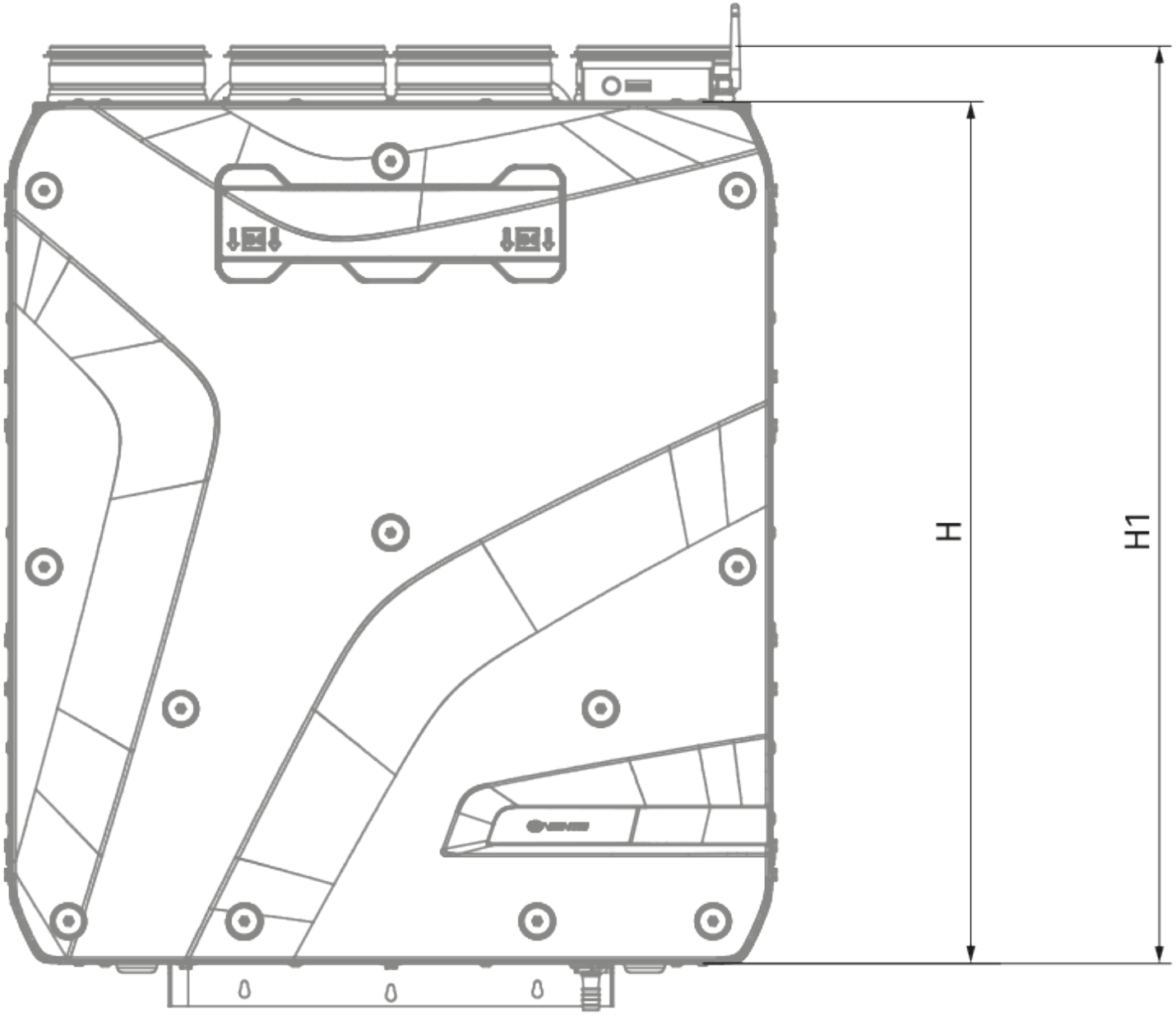
H
H1

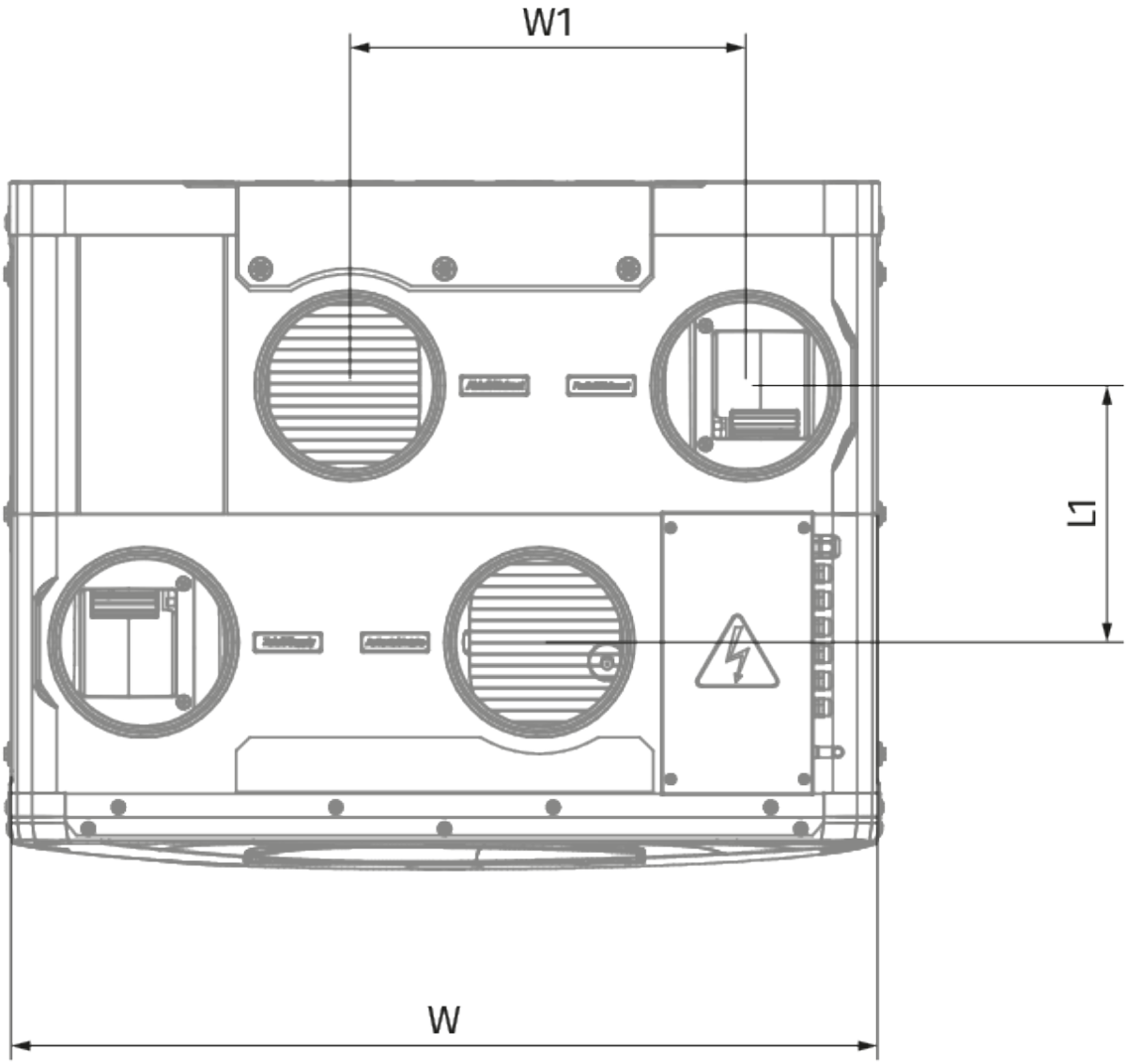
W1
L1
W

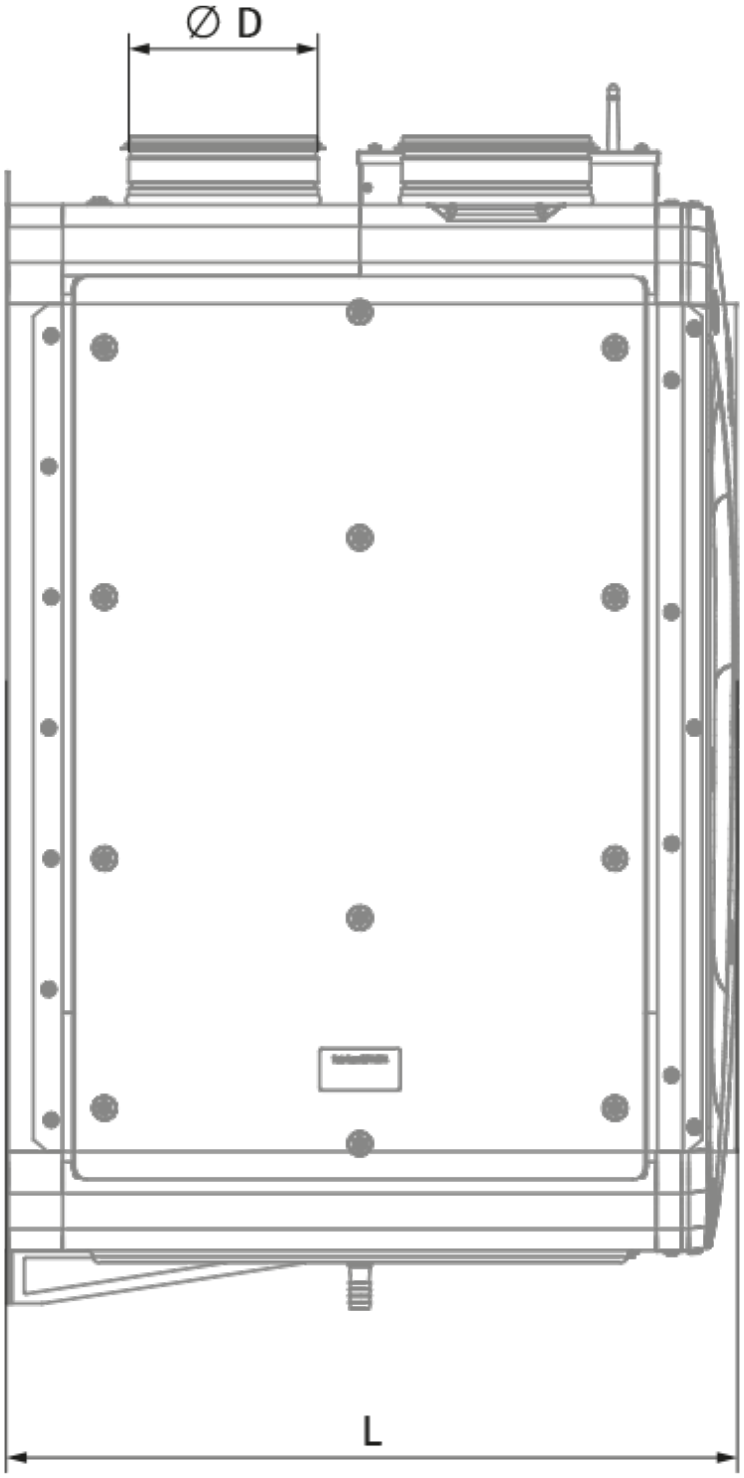
∅ D
L

## Ecodesign

| Trademark | Blauberg | | | | | |
|---|---|---|---|---|---|---|
| Model | Reneo SE 380-E L S21 CF | | | | | |
| Specific energy consumption (SEC) (kWh/(m²/a)) | Cold | | Average | | Warm | |
| | -78.6 | A+ | -40.8 | A | -16.6 | E |
| Type of ventilation unit | Bidirectional | | | | | |
| Type of drive installed | Variable speed | | | | | |
| Type of heat recovery system | Recuperative | | | | | |
| Thermal efficiency of heat recovery (%) | 81 | | | | | |
| Maximum flow rate (m³/h) | 390 | | | | | |
| Electric power input (W) | 194 | | | | | |
| Reference flow rate (m³/s) | 0.075 | | | | | |
| Reference pressure difference (Pa) | 50 | | | | | |
| Specific power input (SPI) (W/(m³/h)) | 0.286 | | | | | |
| Control typology | Local demand control | | | | | |
| Maximum internal leakage rates (%) | 2.7 | | | | | |
| Maximum external leakage rates (%) | 2.7 | | | | | |
| Sound power level (dB(A)) | 46 | | | | | |
| The annual electricity consumption (AEC) (kWh/a) | Cold | | Average | | Warm | |
| | 734 | | 197 | | 152 | |
| The annual heating saved (AHS) (kWh/a) | Cold | | Average | | Warm | |
| | 8817 | | 4507 | | 2038 | |

## Accessories

### Control Panels

| Name | Photo | Description |
|---|---|---|
| S25 |  | LCD control panel |
| S22 |  | Control panels |

| | | |
|---|---|---|
| S22 Wi-Fi |  | Control panels |

### CO2 sensors

| Name | Photo | Description |
|---|---|---|
| CD-1 |  | CO2 sensors |
| CD-2 |  | CO2 sensors |

### Humidity sensors

| Name | Photo | Description |
|---|---|---|
| FS2 |  | Humidity sensor |

### Other accessories

| Name | Photo | Description |
|---|---|---|
| FP 496x150x60 ePM1 60 % (F7) |  | F7 panel filter |
| FP 496x150x60 Coarse 90 % (G4) |  | G4 panel filter |