

# Reneo SE 210-E R S21

Heat and energy recovery air handling units

- Power of electrical preheater: 800
- Heat exchanger type: Counter flow
- Heat exchanger material: Enthalpy
- Sound-insulated casing
- Enthalpy heat exchanger
- Bypass: Auto
- Reheater: Optional
- Preheater: Built-in
- BMS protocol: ModBus
- Control: Smartphone
- Casing material: EPP
- Humidity sensor: Optional
- CO2 sensor: Optional
- PM2.5 sensor: Optional

| | Unit of measurement | Reneo SE 210-E R S21 |
|---|---|---|
| Phases | - | 1 |
| Maximum supply voltage | V | 230 |
| Minimum supply voltage | V | 230 |
| Power supply frequency | Hz | 50/60 |
| Power of electrical preheater | W | 800 |
| Maximum airflow | $m^3/h$ | 277 |
| Heat recovery efficiency, max | % | 83 |
| Heat exchanger type | - | Counter flow |
| Heat exchanger material | - | Enthalpy |
| Weight | kg | 22 |
| Transported air temperature (max) | °C | 40 |
| Transported air temperature (min) | °C | -25 |
| Ambient air temperature min | °C | 1 |
| Ambient air temperature max | °C | 40 |
| Ingress protection rating | - | IP22 |
| Ambient air humidity max | % | 60 |
| Ingress protection rating of the drive | - | IP44 |

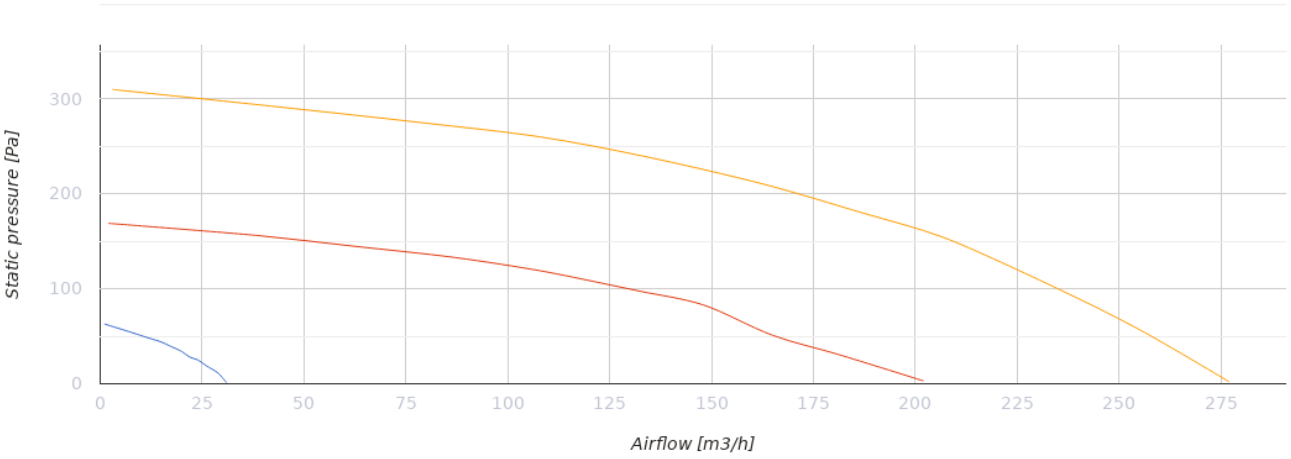


## Dimensions

| D | H | H1 | L | L1 | W / B | W1 / B1 |
|---|---|---|---|---|---|---|
| 125 | 900 | 958 | 452 | 190 | 598 | 273 |

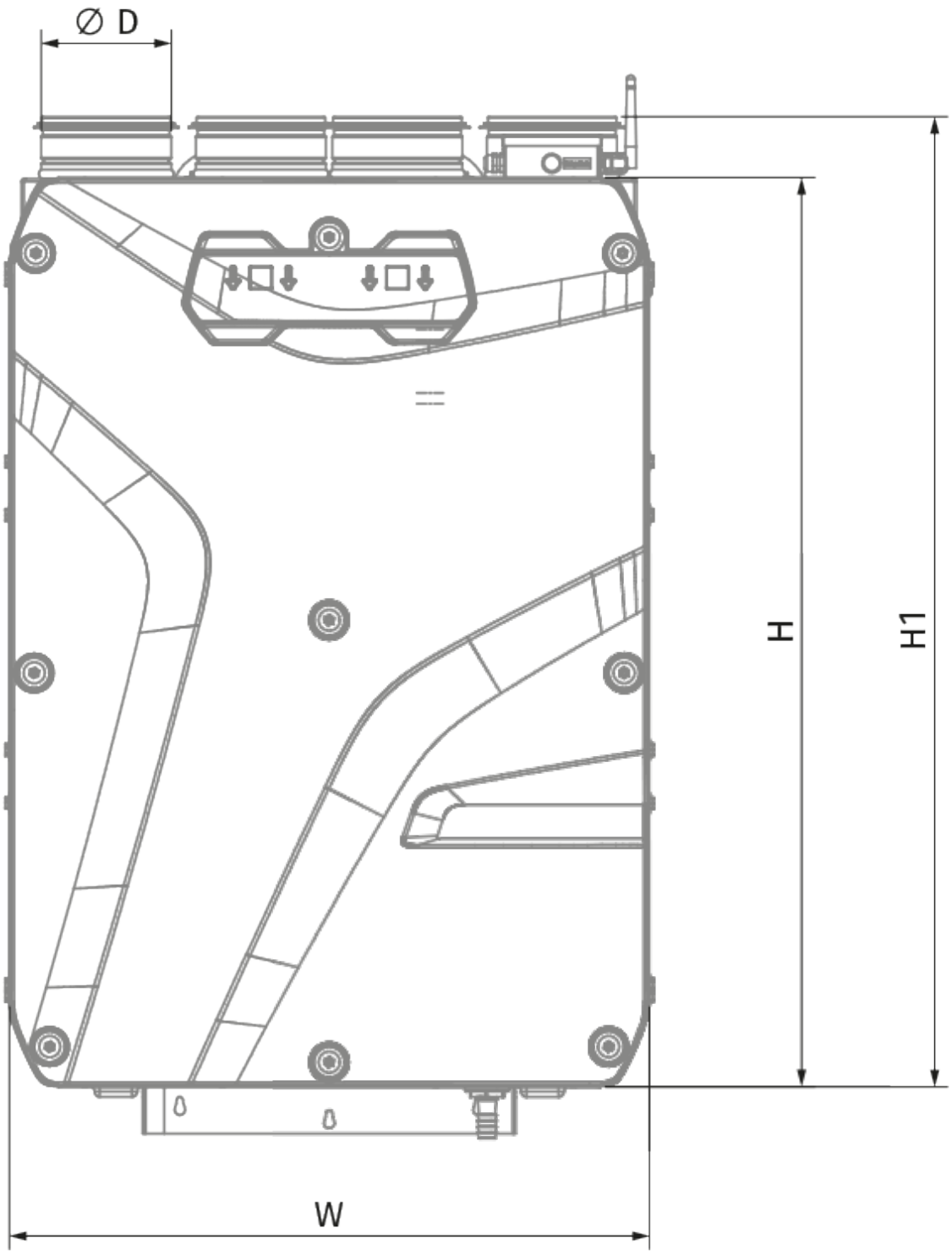
∅ D
H
H1
W

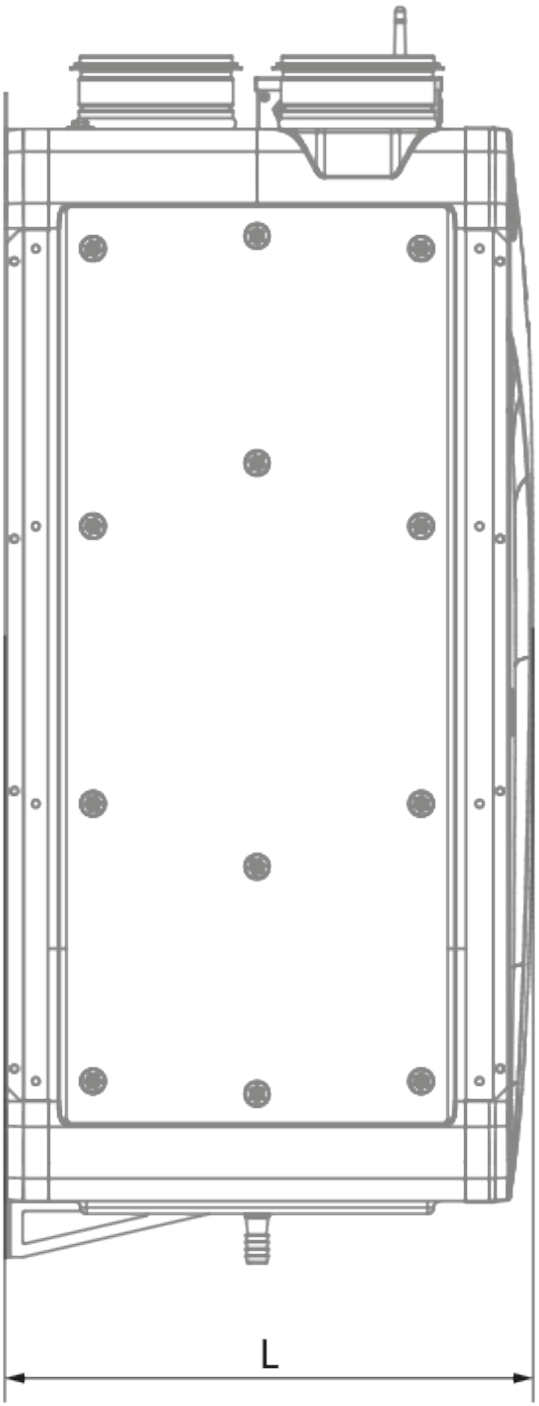
L

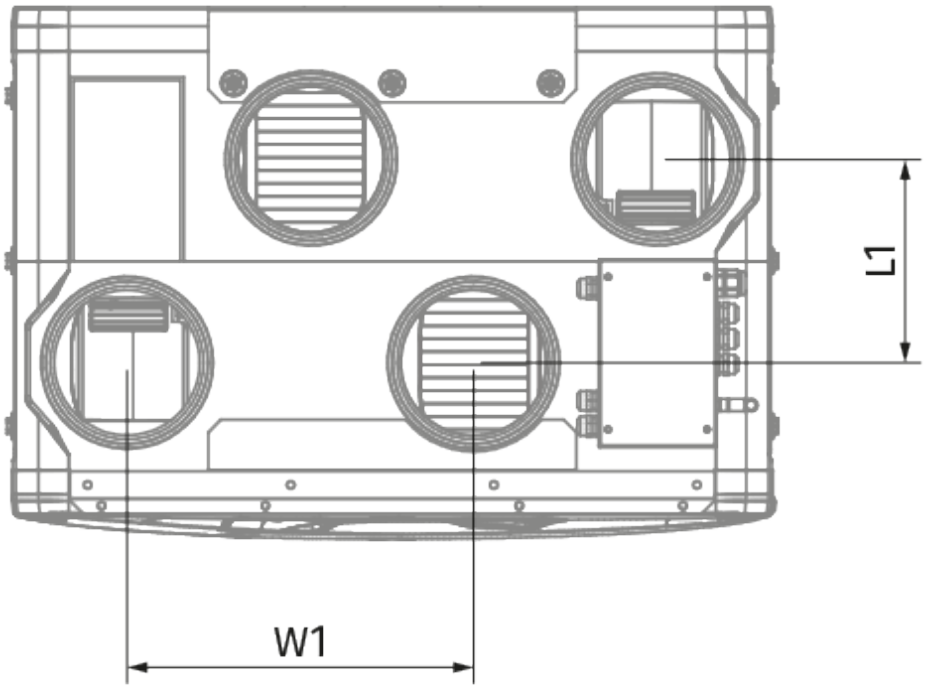
L1
W1

## Ecodesign

| Trademark | Blauberg | | | | | |
|---|---|---|---|---|---|---|
| Model | Reneo SE 210-E R S21 | | | | | |
| Specific energy consumption (SEC) (kWh/(m²/a)) | Cold | | Average | | Warm | |
| | -77.4 | A+ | -40.2 | A | -16.3 | E |
| Type of ventilation unit | Bidirectional | | | | | |
| Type of drive installed | Variable speed | | | | | |
| Type of heat recovery system | Recuperative | | | | | |
| Thermal efficiency of heat recovery (%) | 78 | | | | | |
| Maximum flow rate (m³/h) | 235 | | | | | |
| Electric power input (W) | 96 | | | | | |
| Reference flow rate (m³/s) | 0.046 | | | | | |
| Reference pressure difference (Pa) | 50 | | | | | |
| Specific power input (SPI) (W/(m³/h)) | 0.285 | | | | | |
| Control typology | Local demand control | | | | | |
| Maximum internal leakage rates (%) | 2.7 | | | | | |
| Maximum external leakage rates (%) | 2.7 | | | | | |
| Sound power level (dB(A)) | 52 | | | | | |
| The annual electricity consumption (AEC) (kWh/a) | Cold | | Average | | Warm | |
| | 733 | | 196 | | 151 | |
| The annual heating saved (AHS) (kWh/a) | Cold | | Average | | Warm | |
| | 8695 | | 4445 | | 2010 | |

## Accessories

### Control Panels

| Name | Photo | Description |
|---|---|---|
| S25 |  | LCD control panel |
| S22 |  | Control panels |

| | | |
|---|---|---|
| S22 Wi-Fi |  | Control panels |

### CO2 sensors

| Name | Photo | Description |
|---|---|---|
| CD-1 |  | CO2 sensors |
| CD-2 |  | CO2 sensors |

### Humidity sensors

| Name | Photo | Description |
|---|---|---|
| FS2 |  | Humidity sensor |

### Other accessories

| Name | Photo | Description |
|---|---|---|
| FP 356x100x48 ePM1 60% F7 |  | F7 panel filter |
| FP 356x100x48 Coarse 90% G4 |  | G4 panel filter |