

# Primo EC 125

Mixed-flow inline fans with EC-motors

- Impeller type: Mixed-flow
- Casing material: Polypropylene
- Installation in any position

| | Unit of measurement | Primo EC 125 |
|---|---|---|
| Phases | - | 1 |
| Minimum supply voltage | V | 230 |
| Maximum supply voltage | V | 230 |
| Power supply frequency | Hz | 50/60 |
| Maximum airflow | $m^3/h$ | 375 |
| Weight | kg | 3.68 |
| Transported air temperature (max) | °C | 55 |
| Transported air temperature (min) | °C | -25 |
| Ingress protection rating | - | IPX4 |
| Ingress protection rating of the drive | - | IP44 |
| Impeller material | - | Plastic |

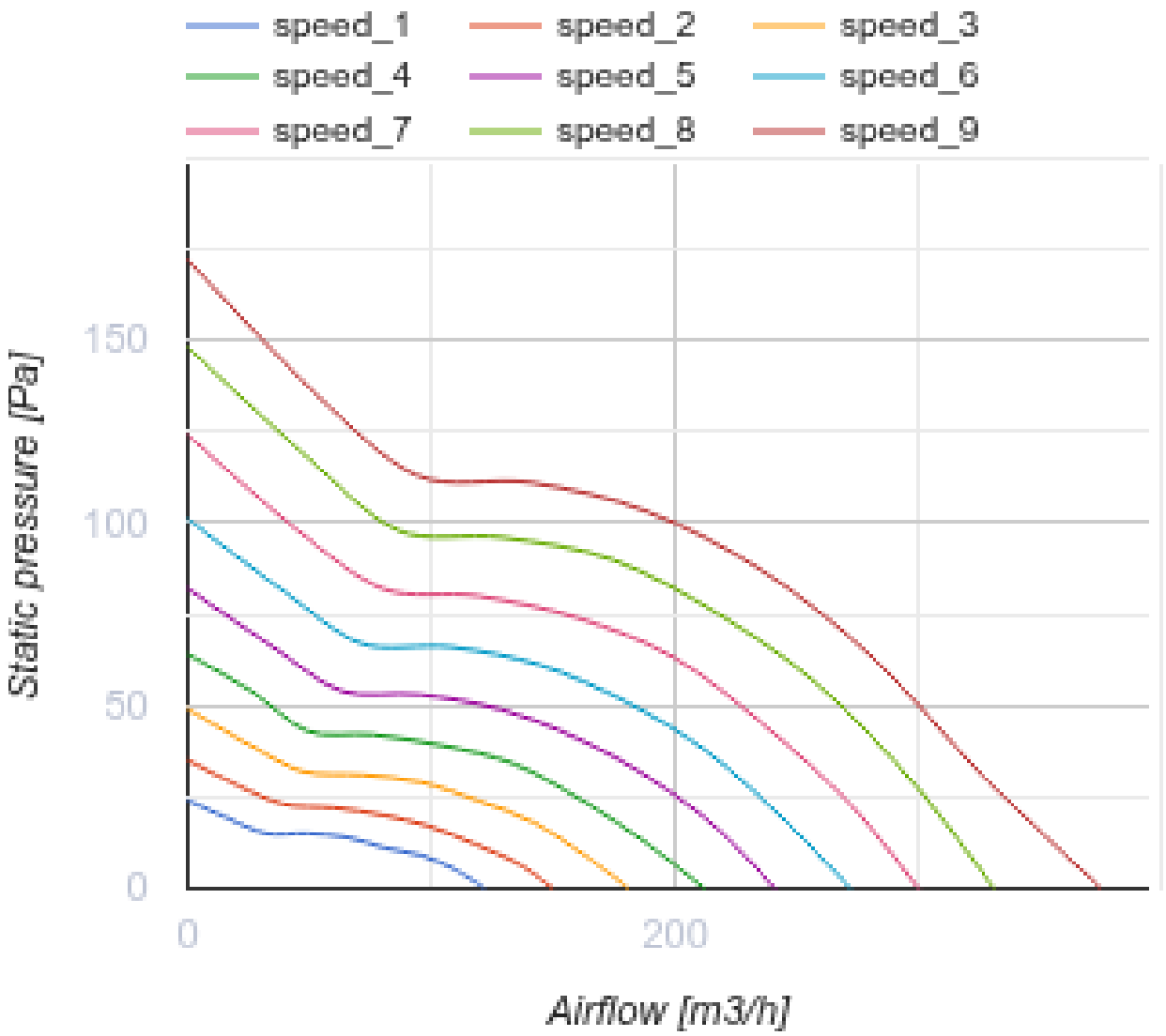
speed_1
speed_2
speed_3
speed_4
speed_5
speed_6
speed_7
speed_8
speed_9
Static pressure [Pa]
150
100
50
0
0
200
Airflow [m3/h]

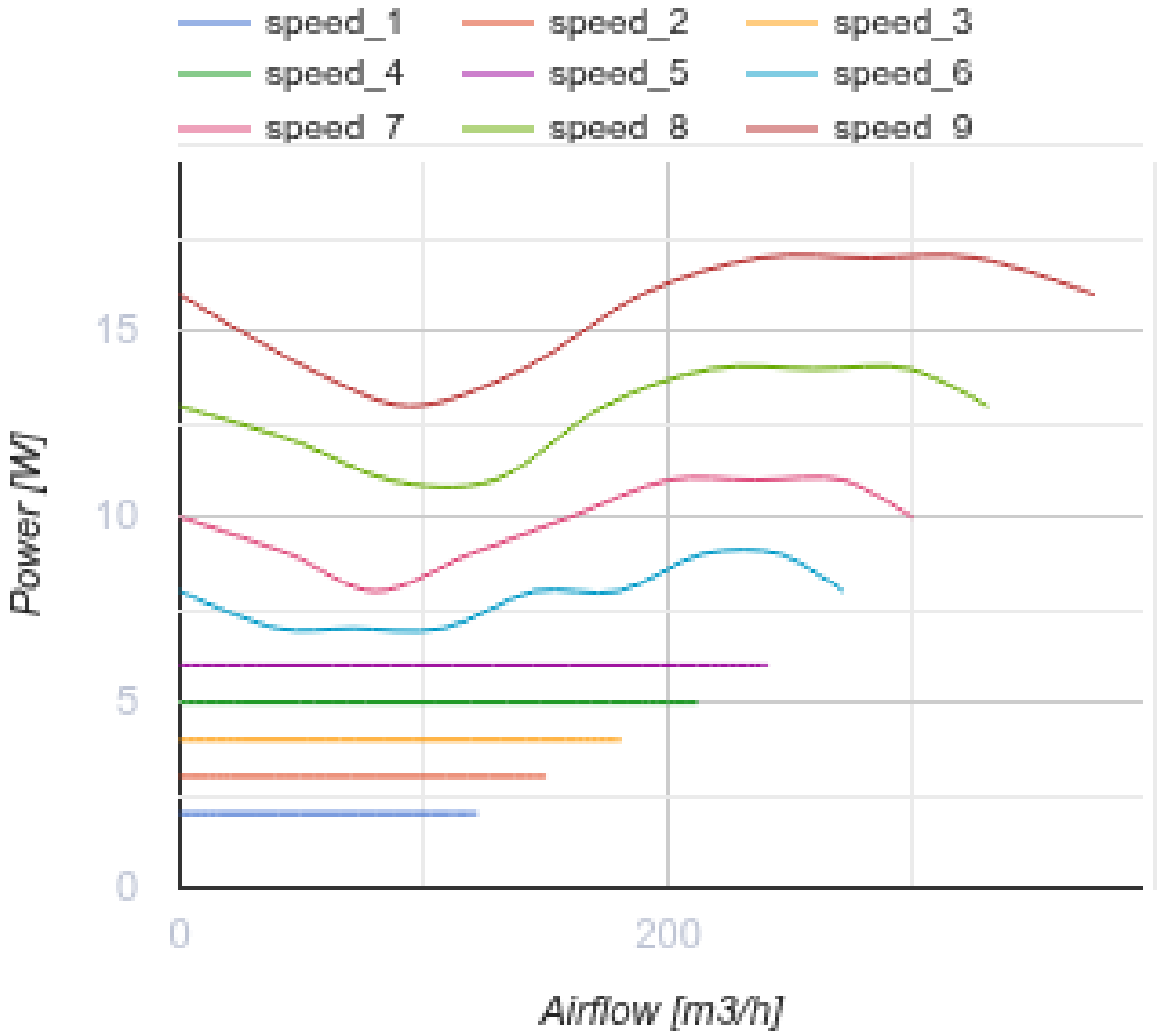


## Dimensions

| A | B | C | Ø D |
|---|---|---|---|
| 242 | 300 | 226 | 125 |

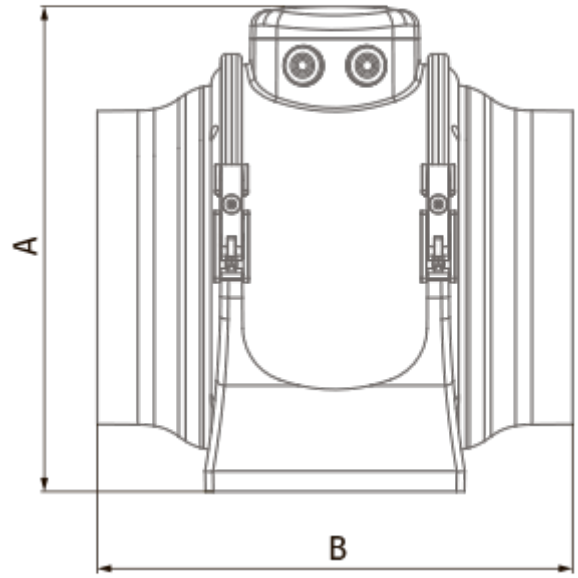
A
B

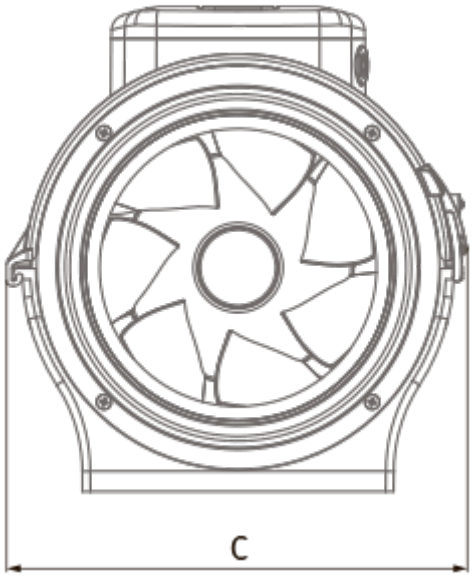
C

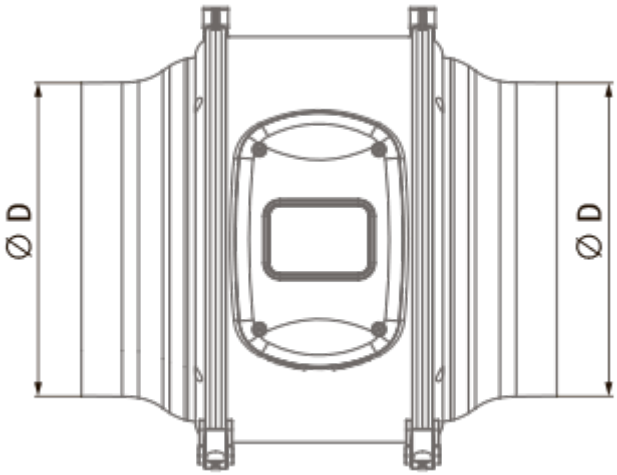
∅ D
∅ D

## Accessories

### Fittings

| Name | Photo | Description |
|---|---|---|
| K 125 |  | Clamp for round flexible ducts |