

Primo 400 (220/60 Hz)

Mixed-flow inline fans

- Impeller type: Mixed-flow
- Casing material: Polypropylene
- Installation in any position

	Unit of measurement	Primo 400 (220/60 Hz)		
Speed	-	1	2	3
Phases	-	1		
Minimum supply voltage	V	230		
Maximum supply voltage	V	230		
Power supply frequency	Hz	60		
Weight	kg	18.5		
Transported air temperature (max)	°C	55		
Transported air temperature (min)	°C	-25		
Ingress protection rating	-	IPX4		
Ingress protection rating of the drive	-	IP20		
Impeller material	-	Plastic		

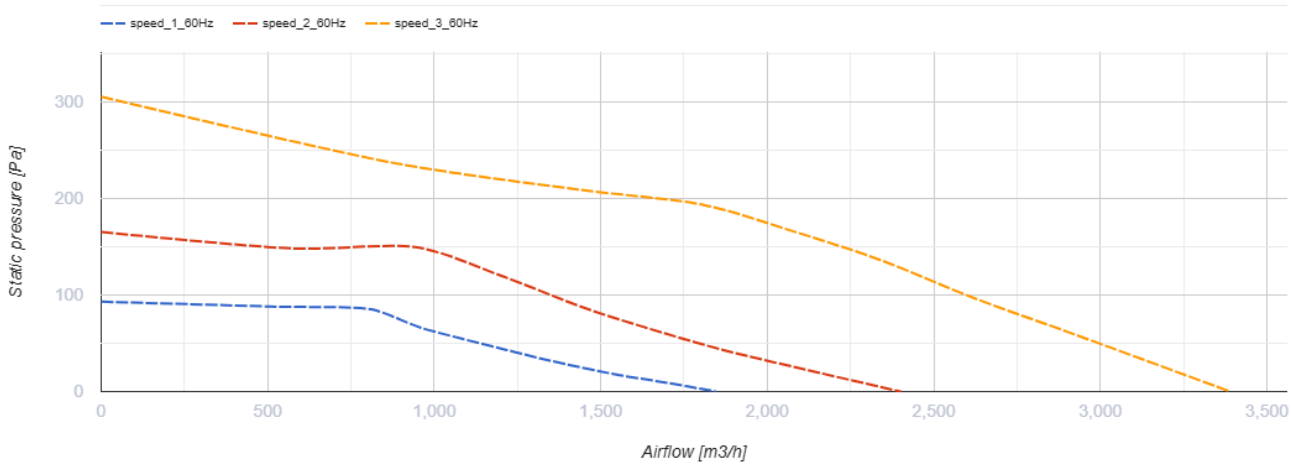

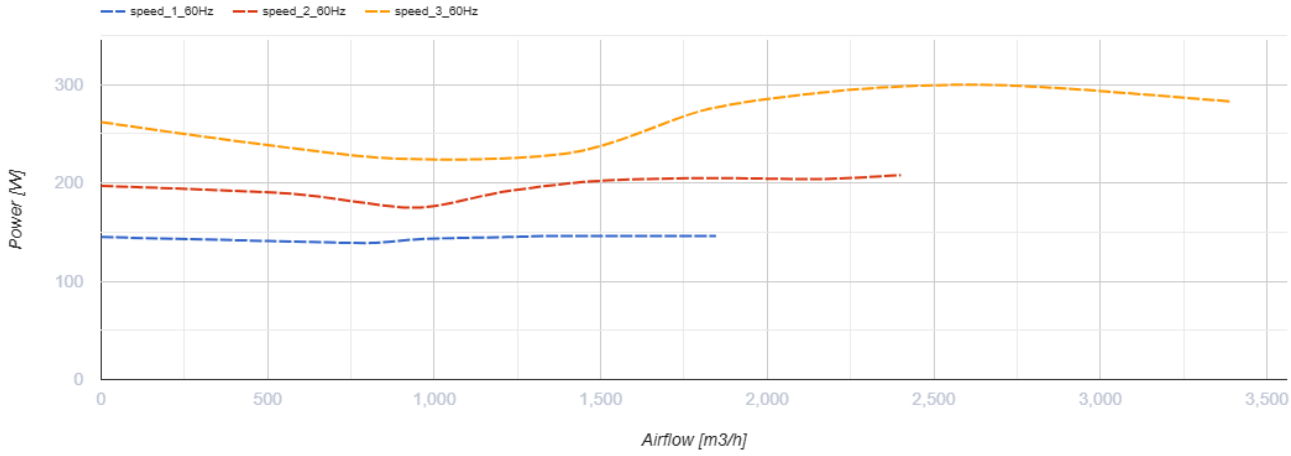

Dimensions

Ø D	Ø d	A	L	B	B1	C	C1
451	395	496	415	513	623	482	484

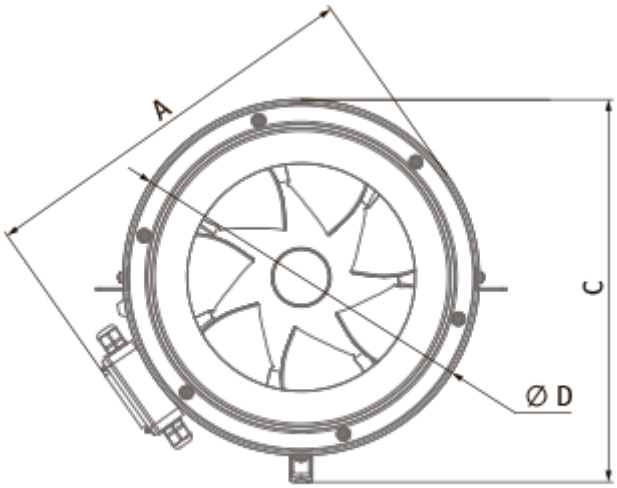
A
C
Ø D

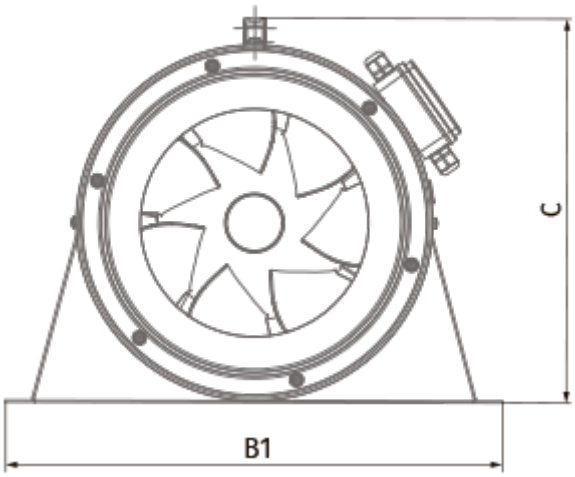
C
B1

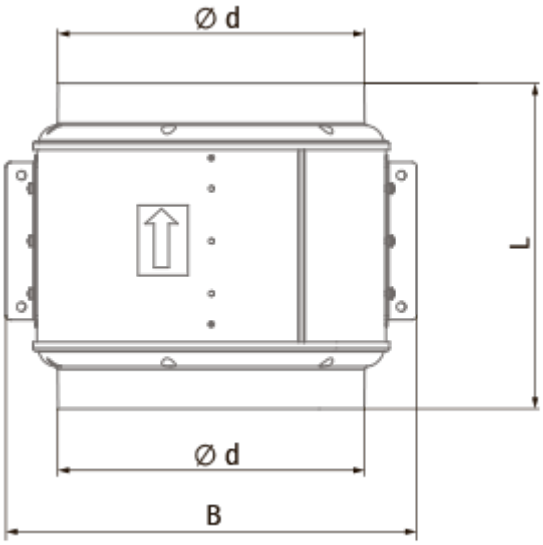
Ø d
L
Ø d
B