

KOMFORT EC SBE 250-E R S21

Heat and humidity recovery air handling units

- Power of electrical preheater: 1400
- Heat exchanger type: Counter flow
- Heat exchanger material: Enthalpy
- Sound-insulated casing
- Enthalpy heat exchanger
- Bypass: Auto
- Reheater: Optional
- Preheater: Built-in
- BMS protocol: ModBus
- Control: Smartphone
- Casing material: Coated steel
- Humidity sensor: Optional
- CO2 sensor: Optional
- PM2.5 sensor: Optional

	Unit of measurement	KOMFORT EC SBE 250-E R S21
Phases	-	1
Minimum supply voltage	V	230
Maximum supply voltage	V	230
Power supply frequency	Hz	50/60
Power of electrical preheater	W	1400
Maximum airflow	m³/h	390
Heat recovery efficiency, max	%	90
Heat exchanger type	-	Counter flow
Heat exchanger material	-	Enthalpy
Weight	kg	66
Transported air temperature (max)	°C	40
Transported air temperature (min)	°C	-25
Ambient air temperature max	°C	40
Ambient air temperature min	°C	1
Ingress protection rating	-	IP20
Ambient air humidity max	%	60
Ingress protection rating of the drive	-	IP44

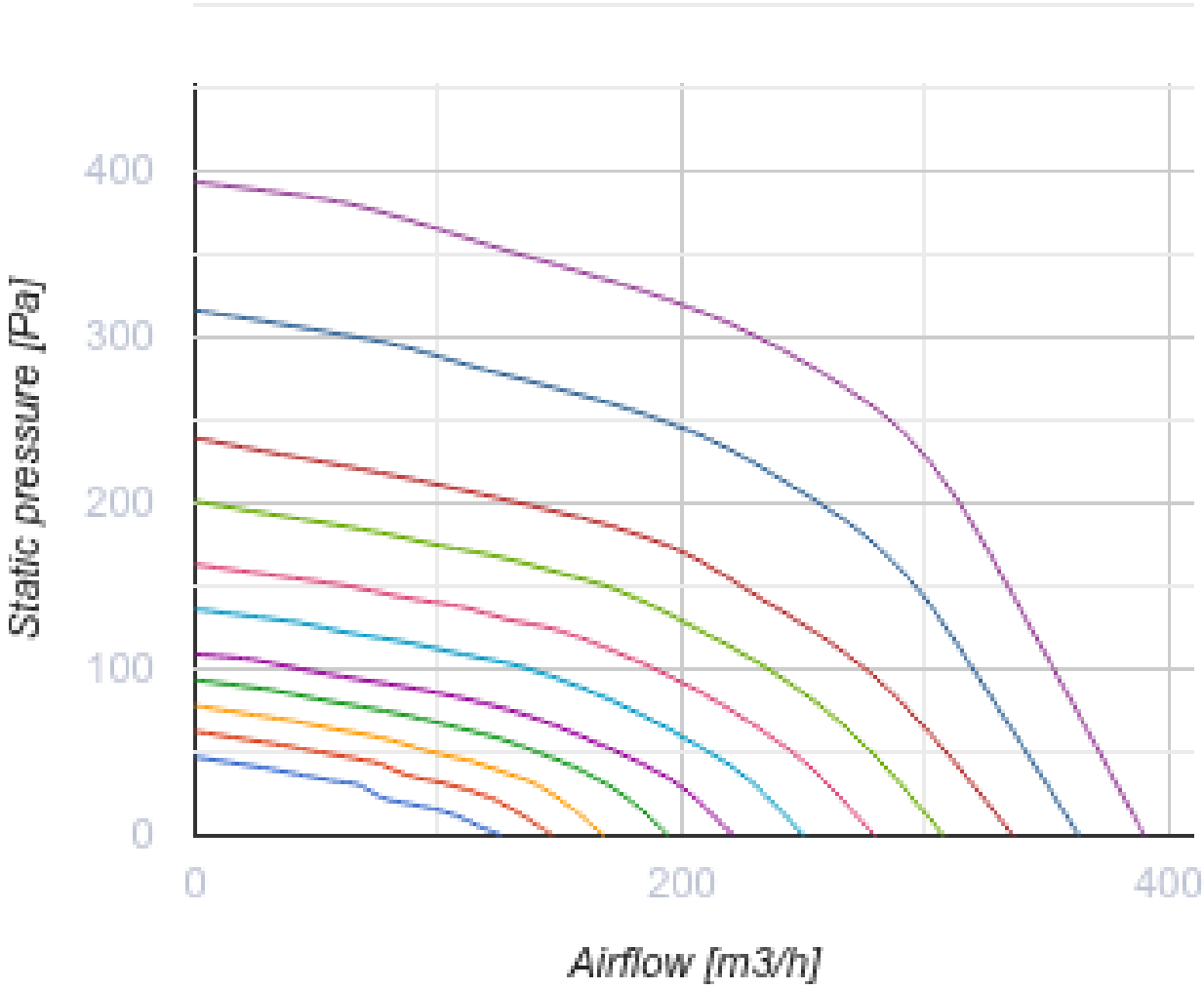
Static pressure [Pa]
400
300
200
100
0
0
200
400
Airflow [m3/h]

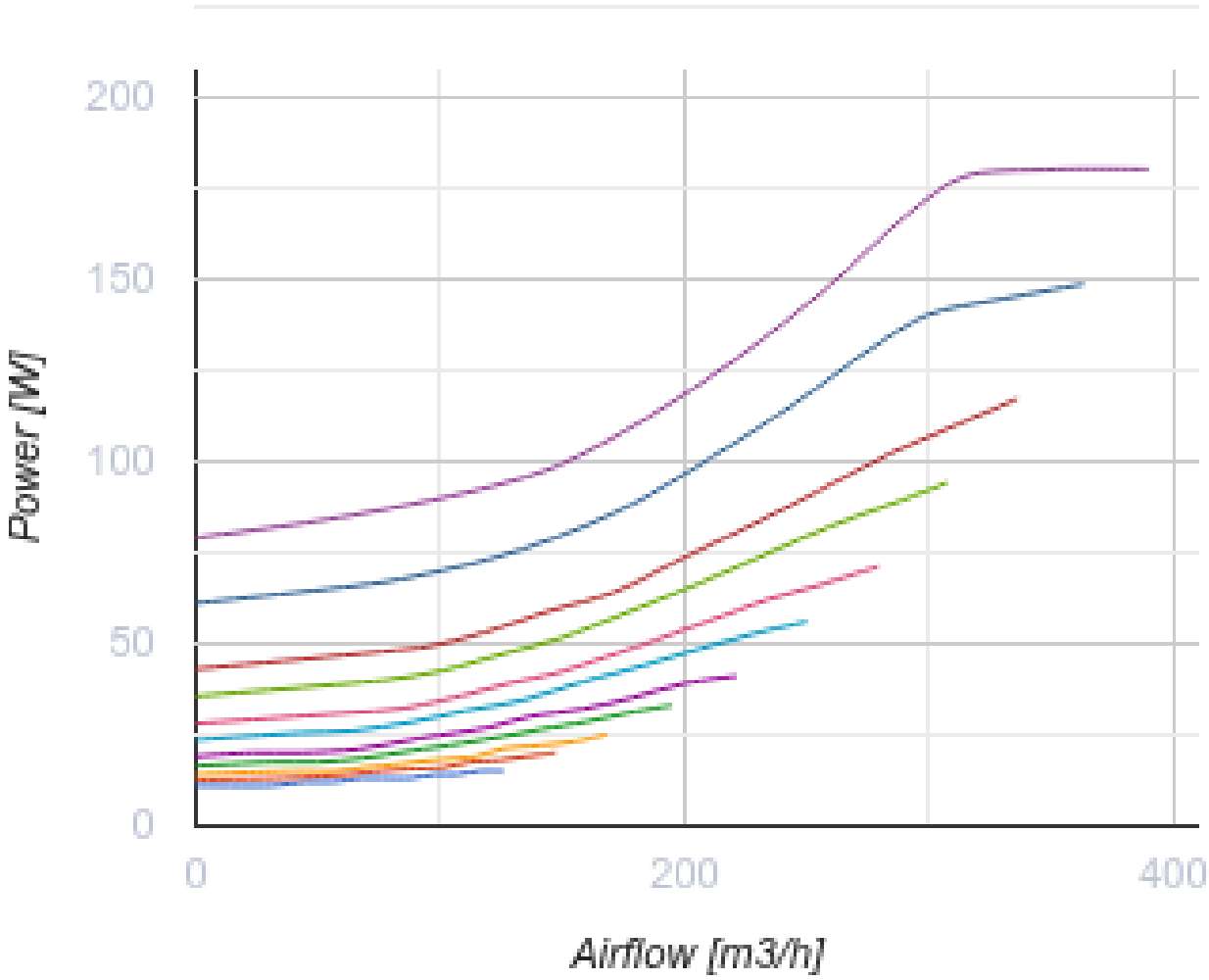

Dimensions

ØD	B	H	L
160	560	970	560

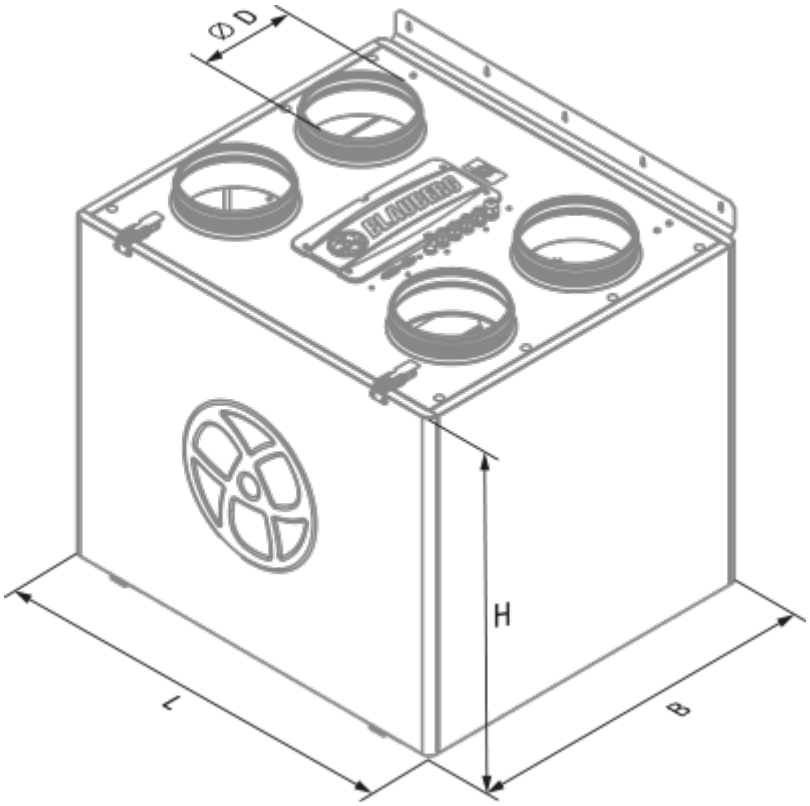
Ø D
H
L
B

Ecodesign

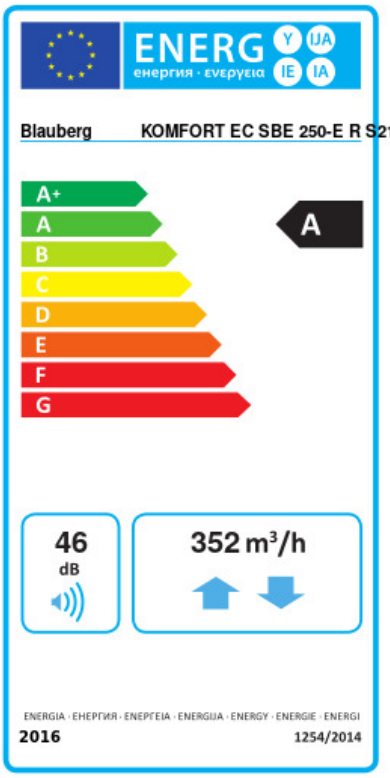

Trademark	Blauberg					
Model	KOMFORT EC SBE 250-E R S21					
Specific energy consumption (SEC) (kWh/(m²/a))	Cold		Average		Warm	
	-78.5	A+	-41	A	-16.8	E
Type of ventilation unit	Bidirectional					
Type of drive installed	Variable speed					
Type of heat recovery system	Recuperative					
Thermal efficiency of heat recovery (%)	80					
Maximum flow rate (m³/h)	352					
Electric power input (W)	180					
Reference flow rate (m³/s)	0.068					
Reference pressure difference (Pa)	50					
Specific power input (SPI) (W/(m³/h))	0.261					
Control typology	Local demand control					
Maximum internal leakage rates (%)	2.7					
Maximum external leakage rates (%)	2.7					
Declared typology	RVU BVU					
Sound power level (dB(A))	46					
The annual electricity consumption (AEC) (kWh/a)	Cold		Average		Warm	
	720		183		138	
The annual heating saved (AHS) (kWh/a)	Cold		Average		Warm	
	8776		4486		2029	

Accessories

Control Panels

Name	Photo	Description
S25		LCD control panel
S22		Control panels

S22 Wi-Fi		Control panels

CO2 sensors

Name	Photo	Description
CD-1		CO2 sensors
CD-2		CO2 sensors

Humidity sensors

Name	Photo	Description
FS2		Humidity sensor

Other accessories

Name	Photo	Description
FP 340x170x48 F7		F7 panel filter
FP 340x170x48 G4		G4 panel filter
FP 500x170x48 G4		G4 panel filter