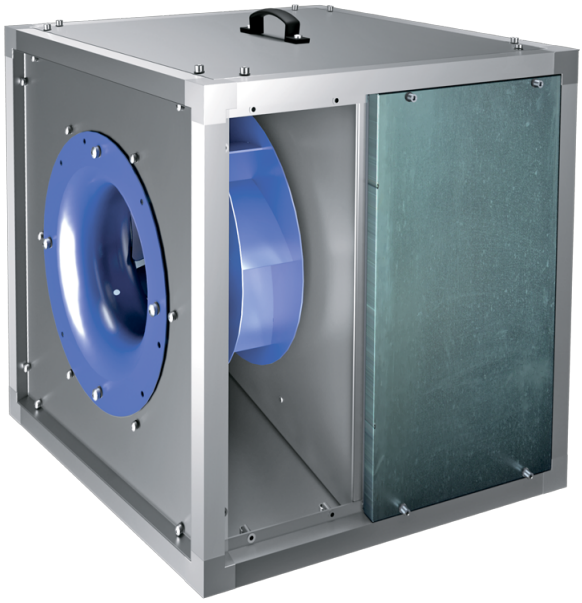

Iso-VK 710 4D

Kitchen inline fans in sound-insulated casings with operational temperature of 120 °C

- Sound-insulated casing
- Impeller type: Centrifugal impeller with backward curved blades
- Casing material: Aluzinc
- Installation in any position

	Unit of measurement	Iso-VK 710 4D
Phases	-	3
Minimum supply voltage	V	400
Maximum supply voltage	V	400
Power supply frequency	Hz	50
Maximum airflow	m³/h	25500
Weight	kg	240
Transported air temperature (max)	°C	120
Transported air temperature (min)	°C	-25
Maximum transported air temperature	-	120°C CONTINUOUS
Ingress protection rating	-	IPX4
Impeller material	-	Steel
Size	mm	710

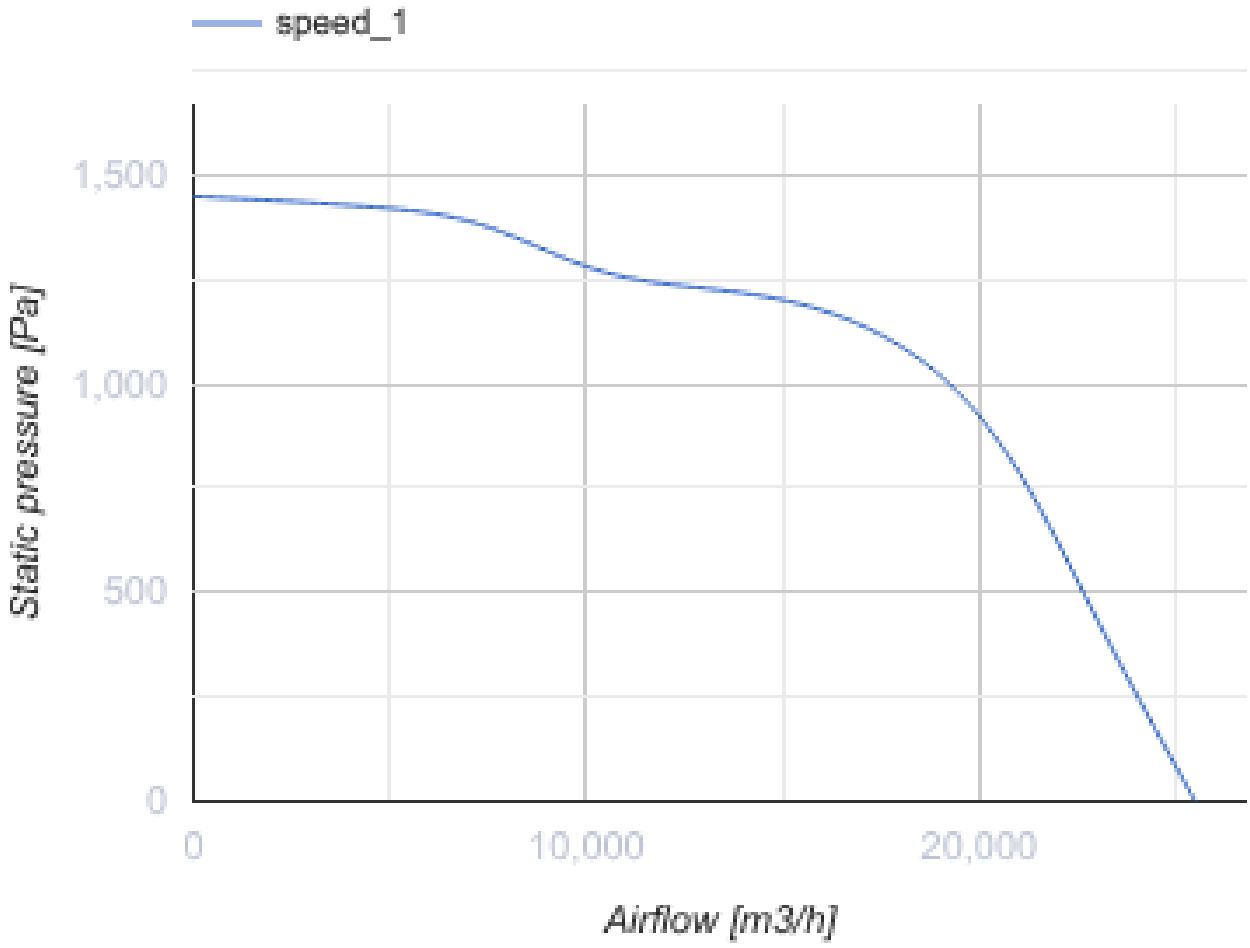
speed_1
1,500
1,000
500
0
Static pressure [Pa]
0
10,000
20,000
Airflow [m3/h]

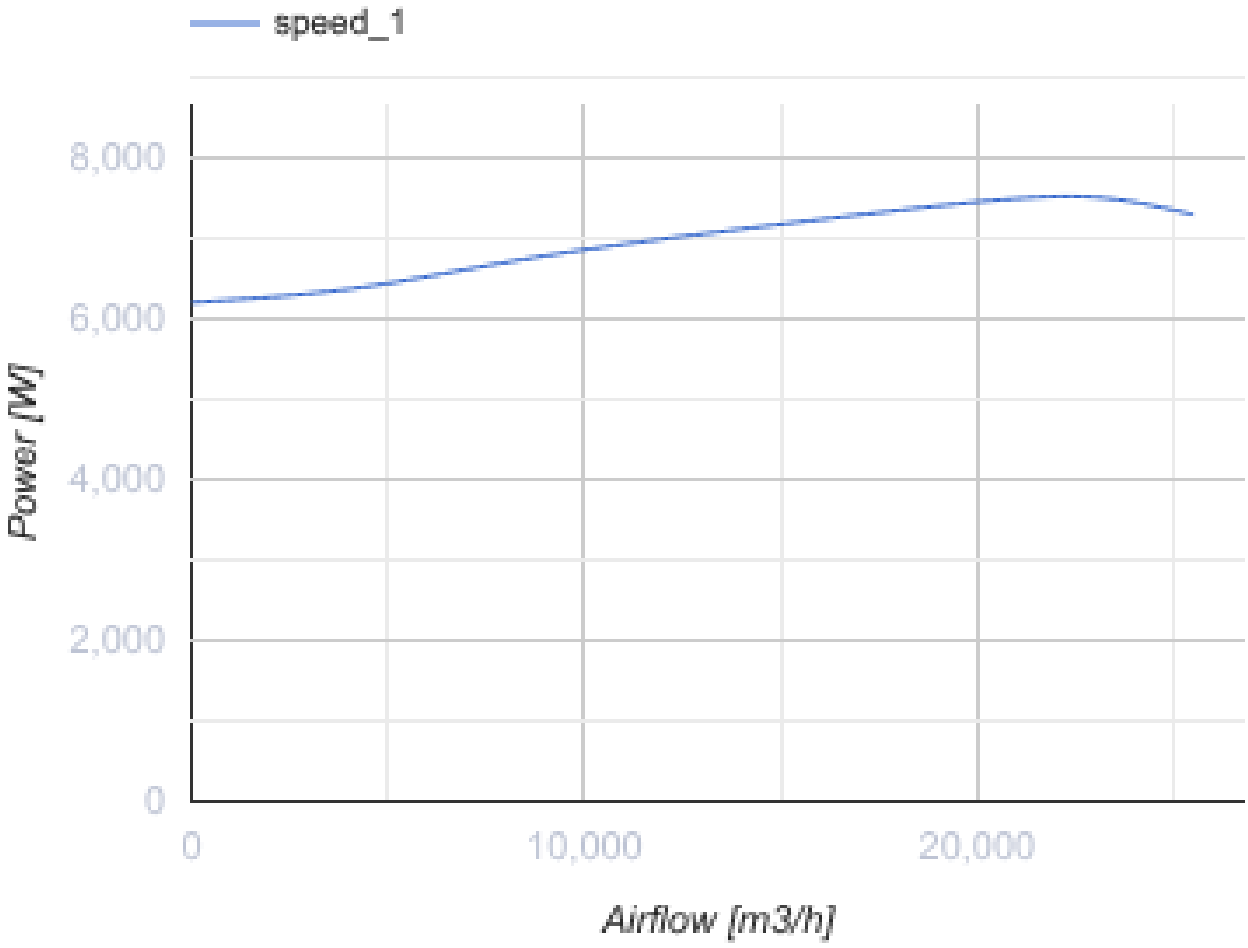

Dimensions

H	H1	H2	L	L1	W	W1	W2
1075	1114	1015	1075	1152	1075	1112	455

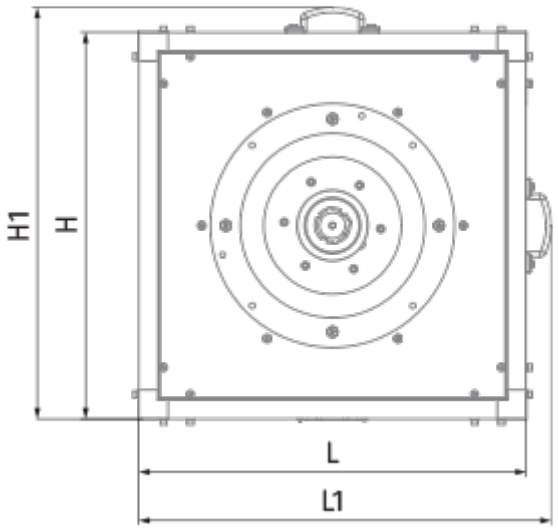
H1
H
L
L1

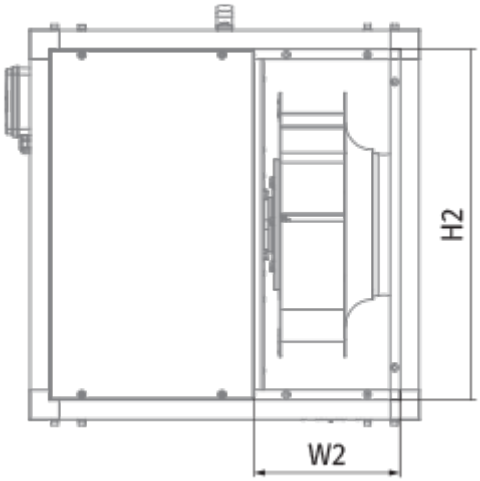
H2
W2

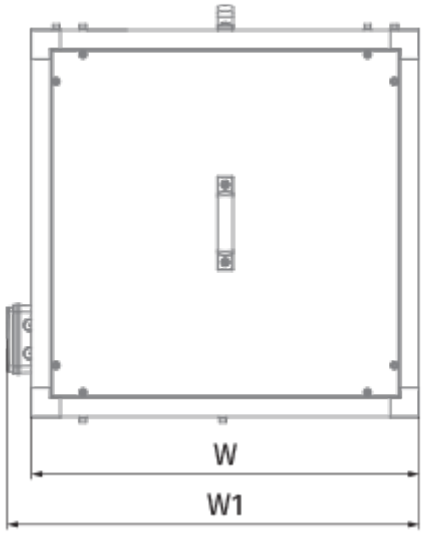
W
W1