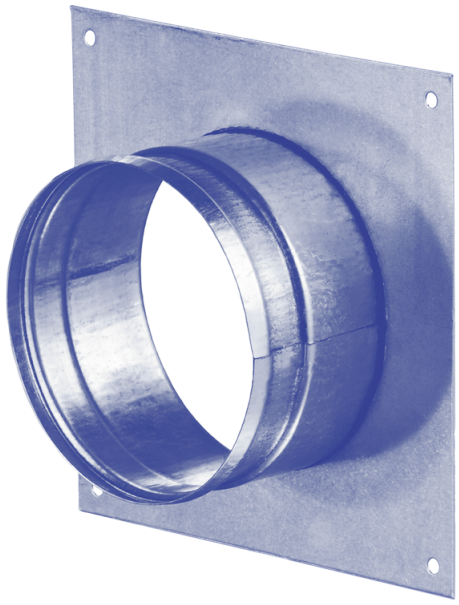

FQZ 315

Spigot with a plate for round ducts

- Casing material: Galvanized steel

	Unit of measurement	FQZ 315

Dimensions

Ø D	a	b	L
315	360 × 360	344 × 344	50

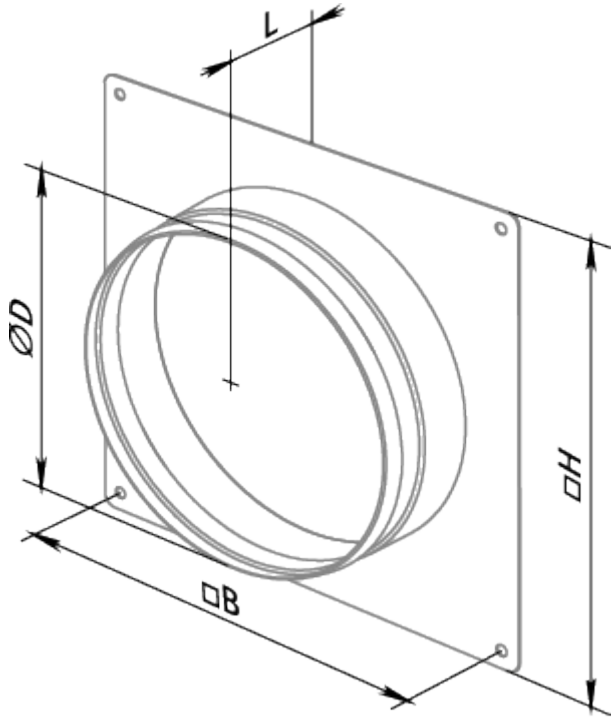
L
ØD
□H
□B