

Ducto 100 T

Low noise axial inline fans for exhaust or supply ventilation with superior air flow

- Casing material: Plastic
- Timer: Turn off timer

	Unit of measurement	Ducto 100 T
Minimum supply voltage	V	220
Maximum supply voltage	V	240
Power supply frequency	Hz	50
Maximum airflow	m^3/h	100
Weight	kg	0.61
Ambient air temperature min	°C	1
Ambient air temperature max	°C	40
Ingress protection rating	-	IPX4
Impeller material	-	Plastic

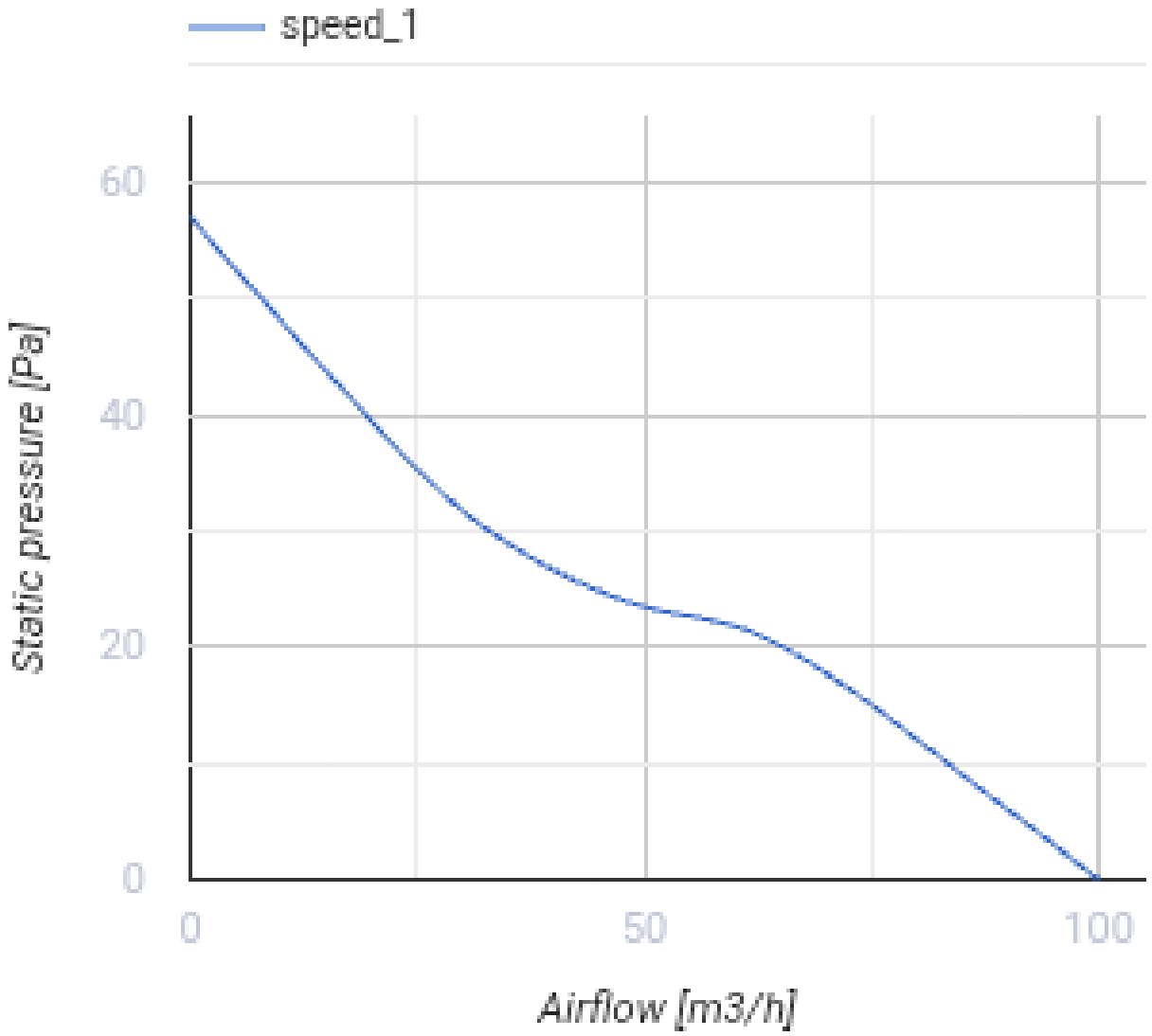

Dimensions

L	ØD
137.5	100

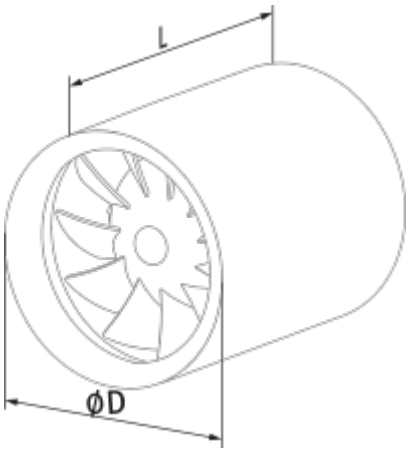
L
ØD

Ecodesign

Trademark	Blauberg					
Model	Ducto 100 T					
Specific energy consumption (SEC) (kWh/(m²/a))	Cold		Average		Warm	
	-34.6	A	-16.7	E	-6.4	F
Type of ventilation unit	Unidirectional					
Type of drive installed	Single speed					
Type of heat recovery system	None					
Maximum flow rate (m³/h)	110					
Electric power input (W)	7.5					
Reference flow rate (m³/s)	0.021					
Specific power input (SPI) (W/(m³/h))	0.068					
Control typology	Clock control					
Maximum external leakage rates (%)	2.7					
Declared typology	RVU UVU					
Sound power level (dB(A))	45					
The annual electricity consumption (AEC) (kWh/a)	Cold		Average		Warm	
	81		81		81	
The annual heating saved (AHS) (kWh/a)	Cold		Average		Warm	
	3667		1874		848	