

Centro-MZ EC 160

Inline centrifugal fans

• Impeller type: Centrifugal impeller with backward curved blades
• Casing material: Galvanized steel
• Installation in any position

	Unit of measurement	Centro-MZ EC 160
Phases	-	1
Maximum supply voltage	V	230
Minimum supply voltage	V	230
Power supply frequency	Hz	50/60
Maximum airflow	m^3/h	735
Weight	kg	2.7
Transported air temperature (max)	°C	60
Transported air temperature (min)	°C	-25
Ingress protection rating	-	IPX4
Impeller material	-	Plastic

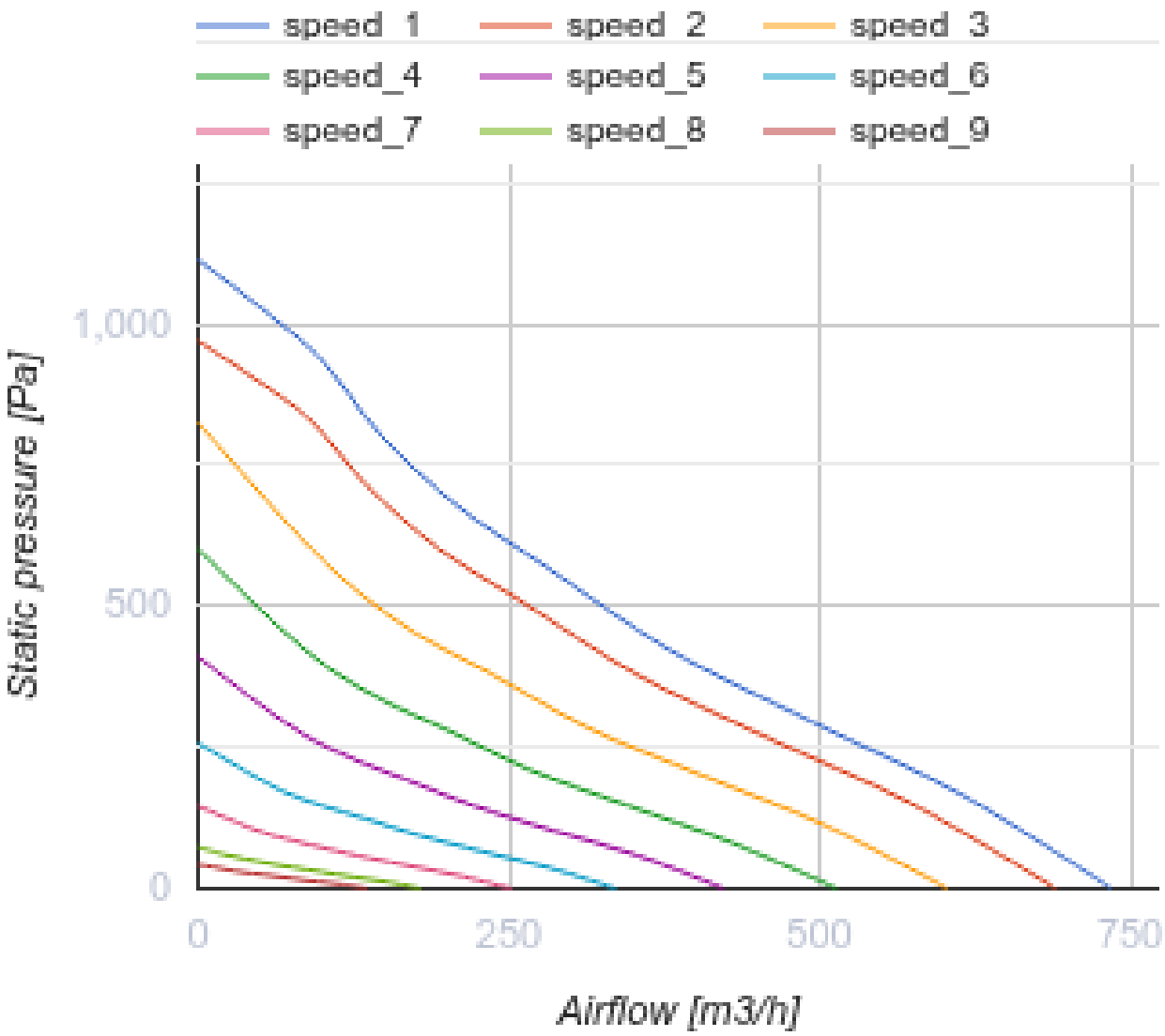
speed_1
speed_2
speed_3
speed_4
speed_5
speed_6
speed_7
speed_8
speed_9
1,000
500
0
Static pressure [Pa]
0
250
500
750
Airflow [m3/h]

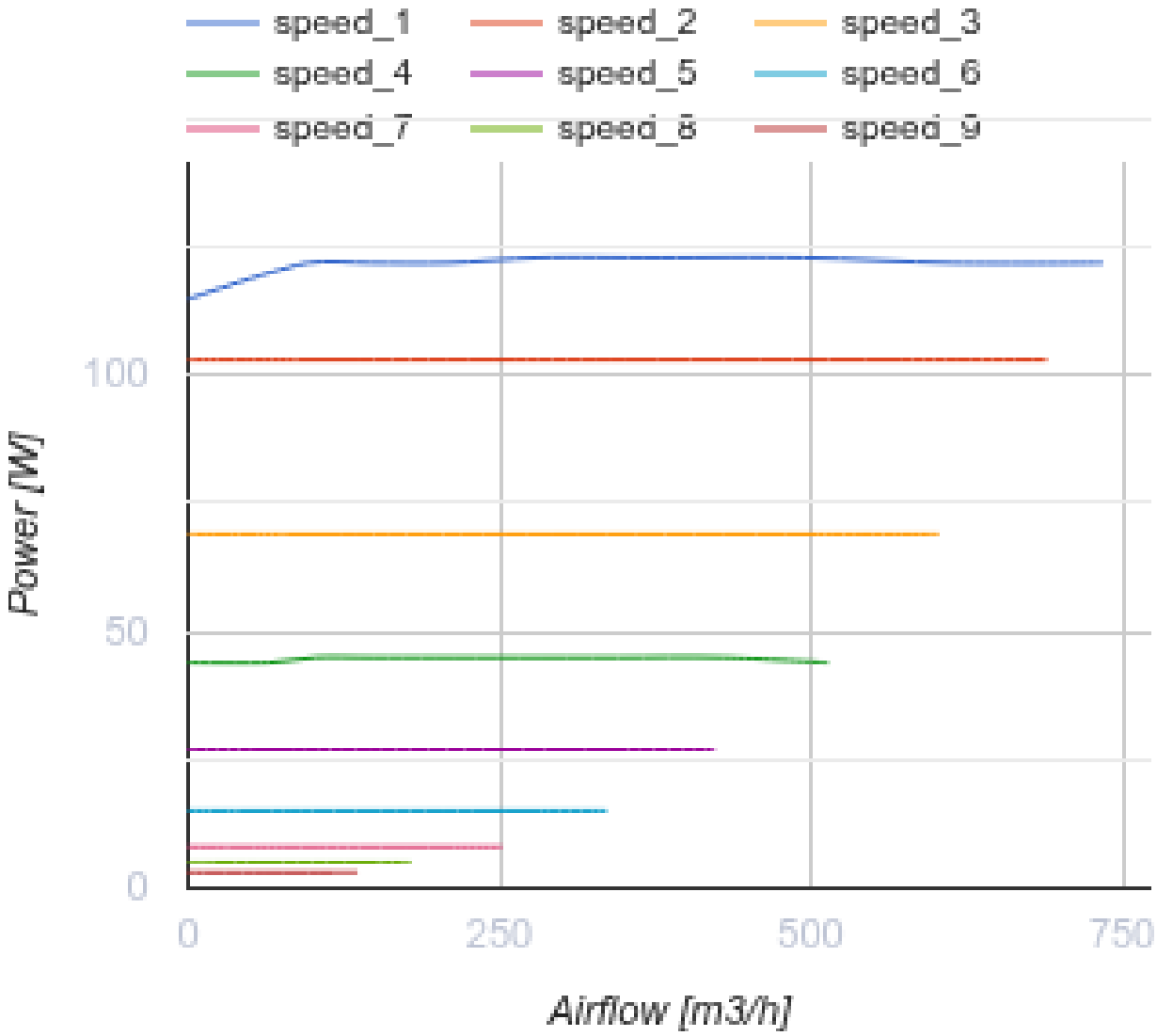

Dimensions

Ø D	Ø D1	H	L	L1	L2
159	275	330	170	20	20

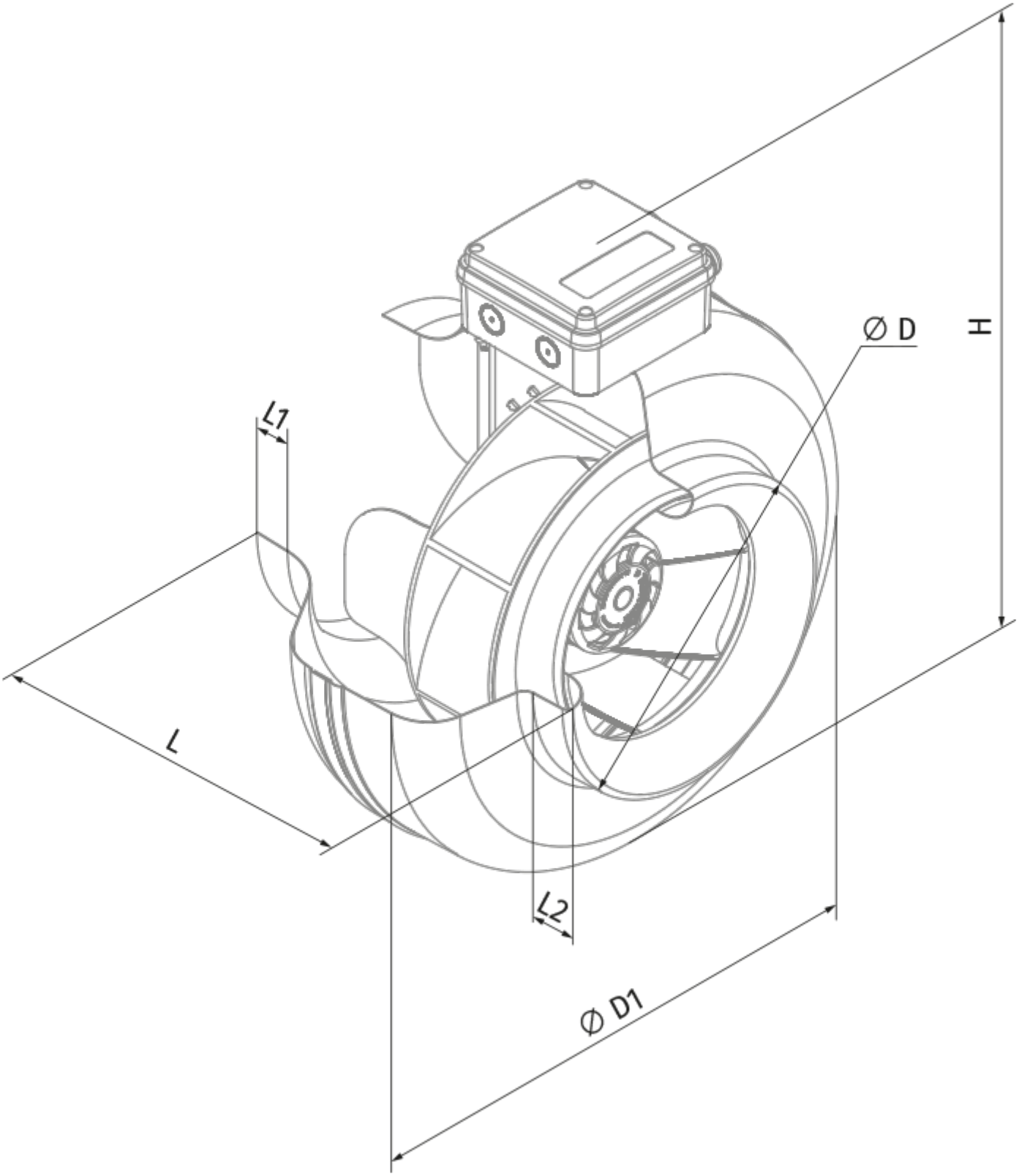
Ø D
H
L1
L
L2
Ø D1

Ecodesign

Trademark	Blauberg
Model	Centro-MZ EC 160
Type of drive installed	External MSD or VSD
Type of heat recovery system	None
Nominal external pressure (Pa)	423
Maximum external leakage rates (%)	2.7
Static efficiency (%)	36.6
Effective electric power input (kW)	0.124
Sound power level (dB(A))	67
Declared typology	NRVU UVU

Accessories

Fittings

Name	Photo	Description
K 160		Clamp for round flexible ducts