

Centro-MZ EC 100

Inline centrifugal fans

• Impeller type: Centrifugal impeller with backward curved blades
• Casing material: Galvanized steel
• Installation in any position

	Unit of measurement	Centro-MZ EC 100
Phases	-	1
Maximum supply voltage	V	230
Minimum supply voltage	V	230
Power supply frequency	Hz	50/60
Maximum airflow	m^3/h	345
Weight	kg	2.5
Transported air temperature (max)	°C	60
Transported air temperature (min)	°C	-25
Ingress protection rating	-	IPX4
Impeller material	-	Plastic

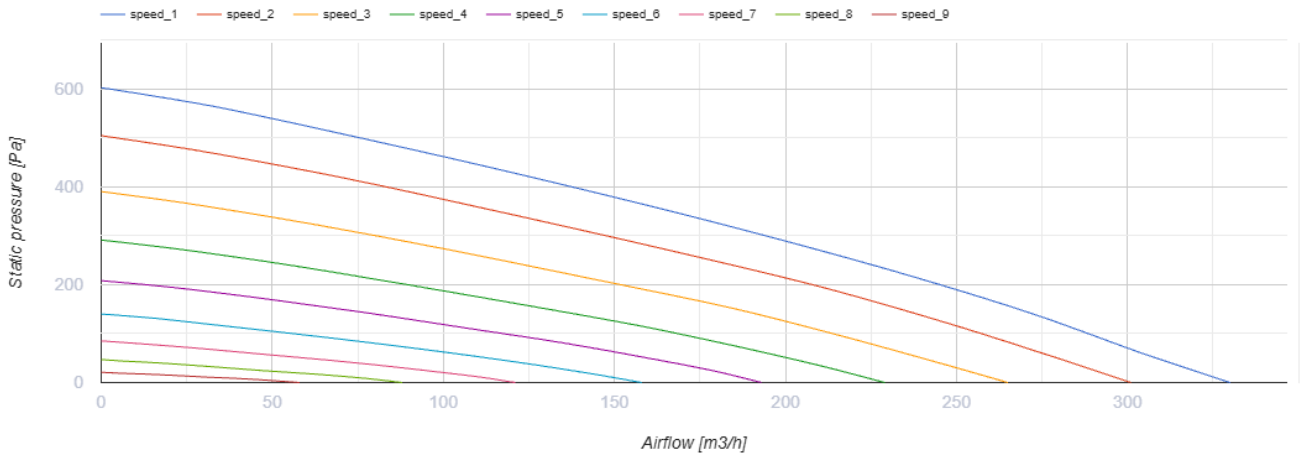

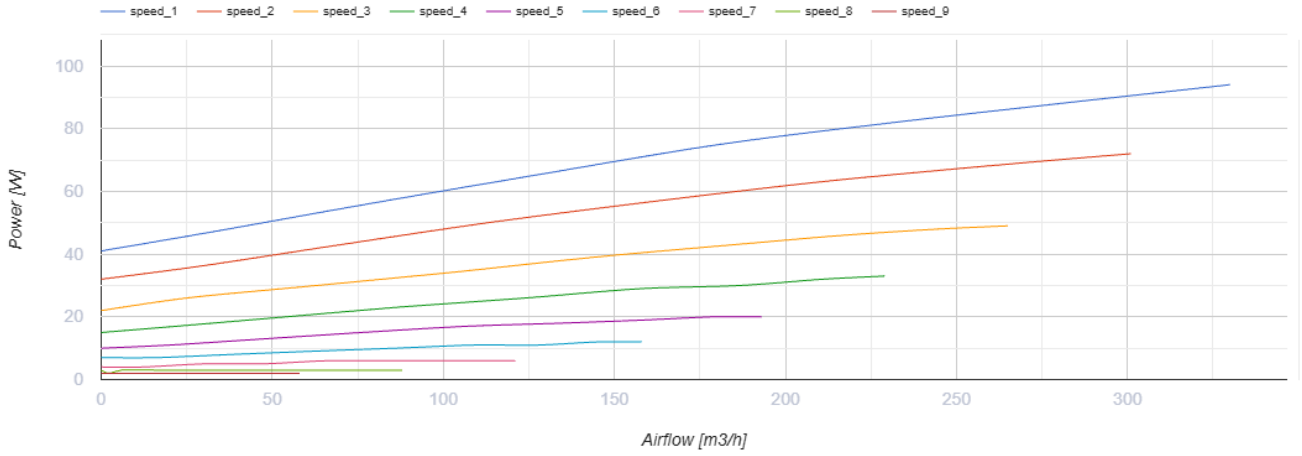

Dimensions

Ø D	Ø D1	H	L	L1	L2
99	245	300	195	20	20

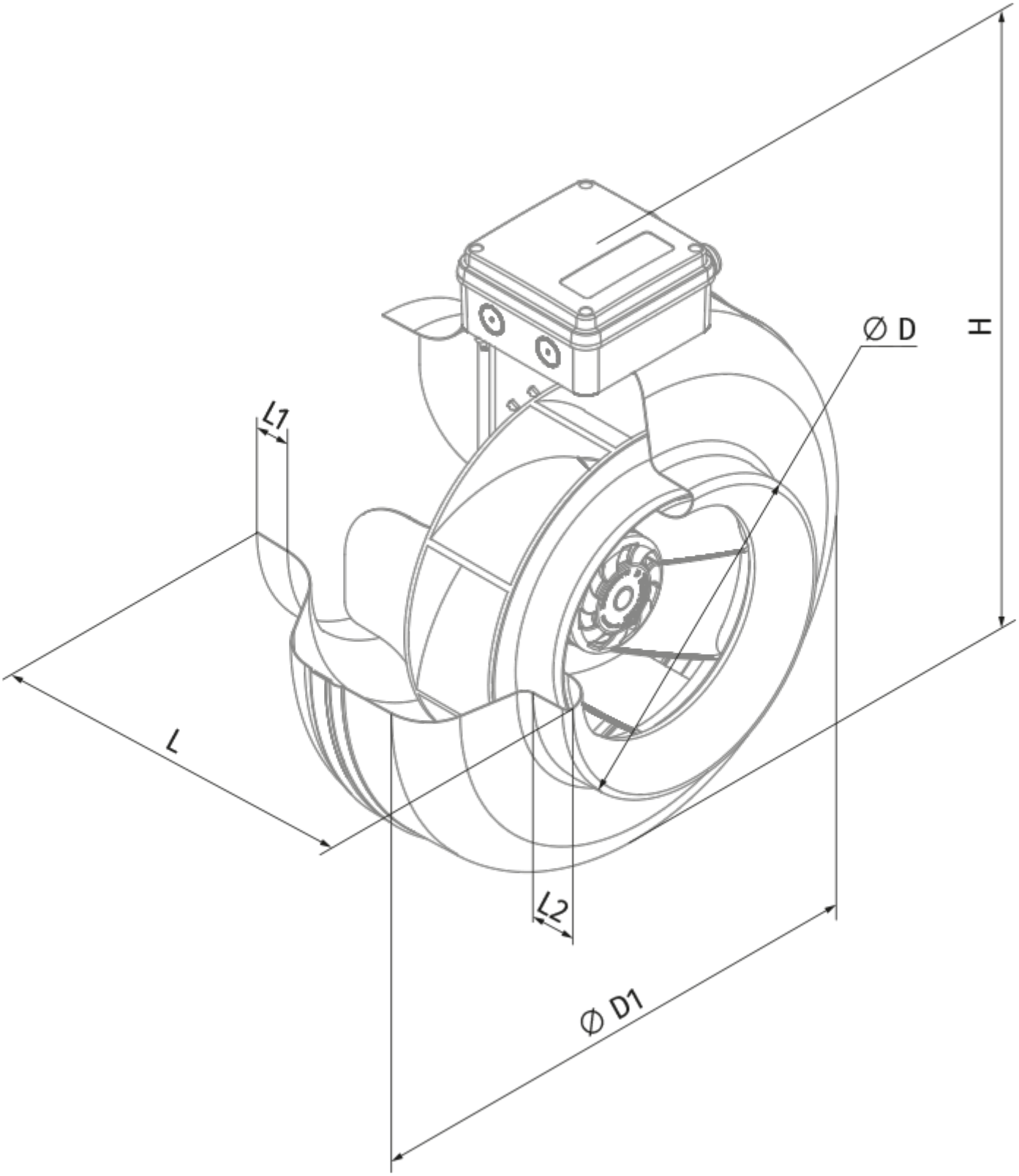
Ø D
H
L1
L
L2
Ø D1

Ecodesign

Trademark	Blauberg					
Model	Centro-MZ EC 100					
Specific energy consumption (SEC) (kWh/(m²/a))	Cold		Average		Warm	
	-53.3	A+	-26.2	B	-10.7	E
Type of ventilation unit	Unidirectional					
Type of drive installed	Variable speed					
Type of heat recovery system	None					
Maximum flow rate (m³/h)	287					
Electric power input (W)	90					
Reference flow rate (m³/s)	0.056					
Reference pressure difference (Pa)	50					
Specific power input (SPI) (W/(m³/h))	0.155					
Control typology	Local demand control					
Maximum external leakage rates (%)	2.7					
Sound power level (dB(A))	50					
The annual electricity consumption (AEC) (kWh/a)	Cold		Average		Warm	
	82		82		82	
The annual heating saved (AHS) (kWh/a)	Cold		Average		Warm	
	5536		2830		1280	

Accessories

Fittings

Name	Photo	Description
K 100		Clamp for round flexible ducts