

BLAUBERG

Installation instructions

DPK(1) 100/125

Ceiling diffuser

PURPOSE

Ceiling diffusers are used to organize a ventilation system to regulate air flow.
The main places of application of ceiling diffusers are office premises, social premises, special premises (hospitals, clean rooms, etc.).

DELIVERY SET

Diffuser - 1 pc.; Installation manual - 1 pc.; Packing box - 1 pc.

OVERALL DIMENSIONS

Dimensions [mm]

DPK 100

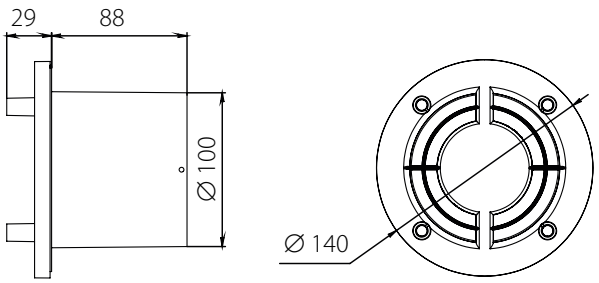

DPK(1) 125

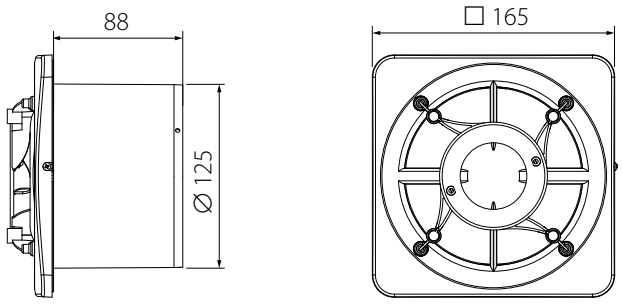

INSTALLATION

1. Make sure that the air duct is installed flush with the ceiling. If necessary, cut the duct to the ceiling level.

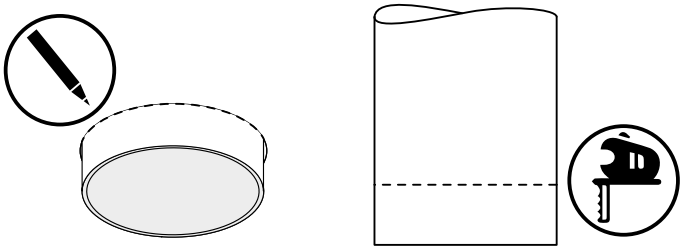

2. Install the diffuser casing in the air duct.

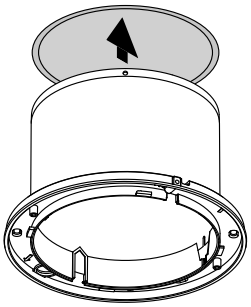

3. Secure the diffuser to the ceiling using wall plugs and/or self-tapping screws depending on the ceiling material.

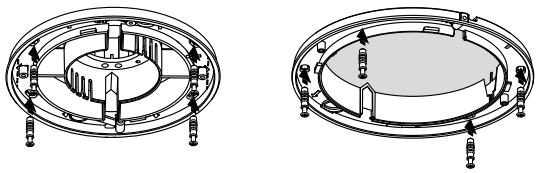

4. Install the front grille on the diffuser by turning it clockwise until the bayonet connection clicks.

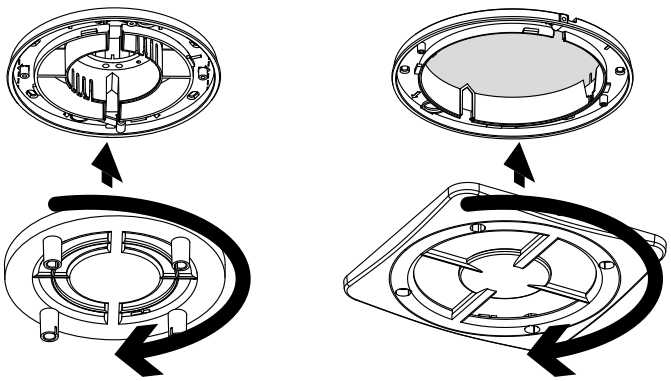

5. Secure the grille with a screw. *

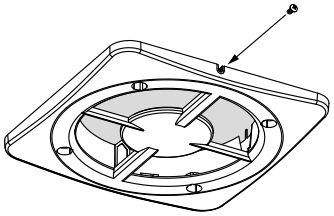

6. Install the decorative panel adapter on the grille. *

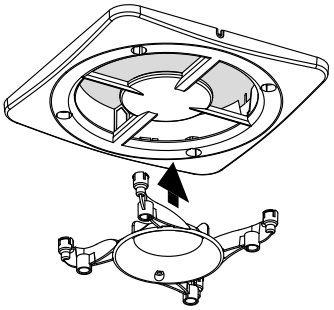

7. Install a decorative panel on the adapter (not included in the delivery set, must be ordered separately).

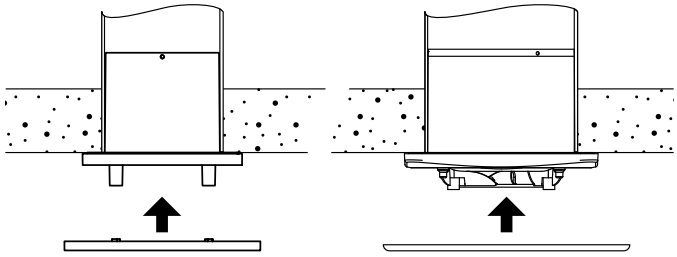

8. If it is necessary to adjust the air flow, install a throttle (air flow regulator) in the diffuser by removing the inserts from it until the required air flow is reached (only for DPK(1) 100/125; for DPK 125, the throttle is not included in the delivery set, must be ordered separately).

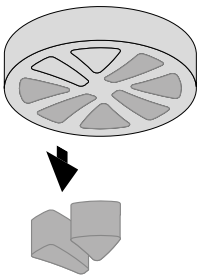

9. To install the air damper, unscrew the front panel fixing screw and remove the decorative panel together with the front grille by turning it counter clockwise to release the bayonet connection.*

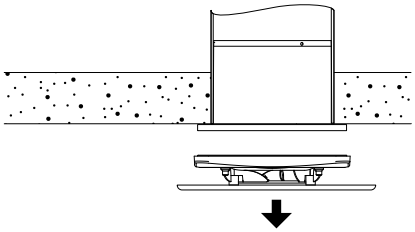

10. After adjusting the air flow using the throttle, reinstall the grille with the decorative panel in the reverse order.*

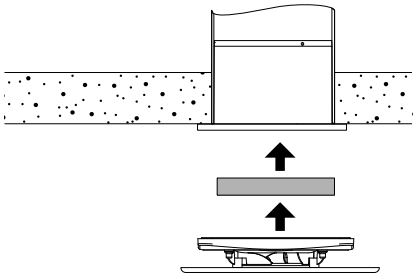

*only for DPK(1) 125.

CERTIFICATE OF ACCEPTANCE
Ceiling diffuser
DPK(1) 100/125

Date of manufacture

Sold
(name of the retailer, store stamp)

Quality Inspector's Stamp

Date of sale